radwag.com

WLY 60/120.C2.K.PGC Scale

WK-307-1022

More information on the website
mirror.radwag.com/en/info,w1,V5J

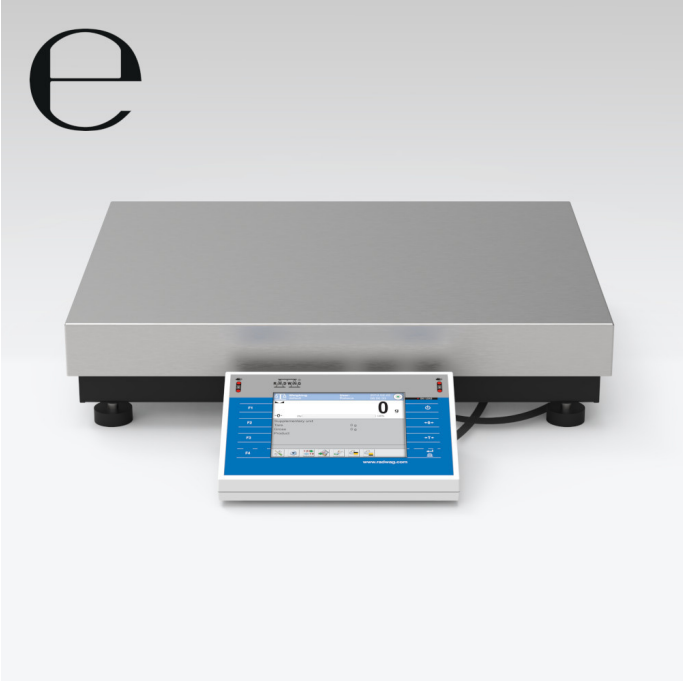

The drawings, photos and graphics used are for illustrative purposes only.

Functions

- Dosing
- Labelling
- Plus/Minus Control
- Percent Weighing
- Totalizing
- Parts counting
- Peak hold
- Formulation
- Newton unit measurement
- Statistics
- Checkweighing
- IR sensors
- Animal weighing
- Differential weighing
- Packaged Goods Control
- ALIBI Memory

Datasheet

Metrological parameters	
Maximum capacity [Max]	60 / 120 kg
Minimum load	0.5 kg
Readability [d]	10 / 20 g
Verification unit [e]	10 / 20 g
Tare range	-120 kg
Repeatability	10 / 20 g

Metrological parameters	
Linearity	±10 / 20 g
Stabilization time	3 s
Adjustment	external
OIML Class	II
Physical parameters	
Leveling system	manual
Display	5.7” resistive colour touchscreen
Cable length	2.5 m
Weighing pan dimensions	400×500 mm
Packaging dimensions W x D x H	720×620×210 mm
Net weight	11 kg
Gross weight	13.1 kg
Construction	
Protection class	IP 65 construction, IP 43 terminal
Communication interface	
Communication interface	2×RS232, 2×USB-A, Ethernet, 4 IN / 4 OUT (digital), Wi-Fi
Electrical parameters	
Power supply	Adapter: 100 – 240V AC 50/60Hz 1A; 15V DC 2.4A Balance: 10 – 28V DC 1A max
Environmental conditions	
Operating temperature	+15 – +30 °C
Storage temperature	-25 – +70 °C
Relative humidity	10% – 85% RH no condensation

* Wi-Fi® is a registered trademark of Wi-Fi® Alliance.



Accessories (Additional Fee)

Transponder card readers
Power Adapters
RS 232 cables (scale - printer)
Cigarette lighter receptacle power supply cables
Barcode scanners
Under-pan weighing
RS 232, RS 485 cables
Label Printers
Additional modules
Displays
IN/OUT Cables
Keypad, external switches
Stands, wall mounting kits and mounting brackets
Receipt Printer
F1 Mass Standard -
knob weights without adjustment chamber, set
AP2-1 Current Loop Unit
Additional Weighing platforms Module
RS 232 – USB Converter

Software (Additional Fee)

• E2R Weighing [WX-010-0099]
• Audit Trail Reader [WX-010-0186]
• RADWAG Remote Desktop [WX-010-0107]
• RAD Key [WX-010-0005]
• Label Editor R02 [WX-010-0094]
• R-Lab [WX-010-0080]

Device dimensions W x D x H

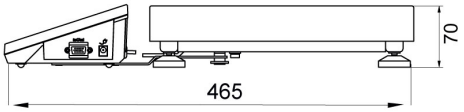

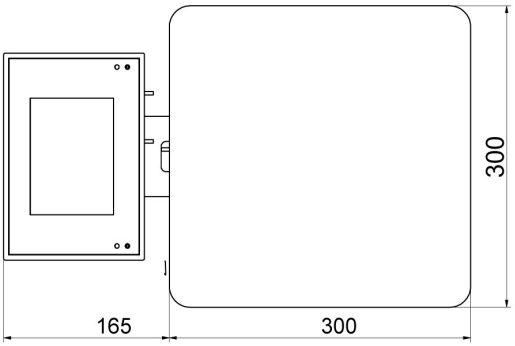

F1 version

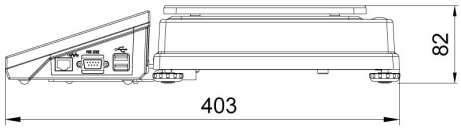

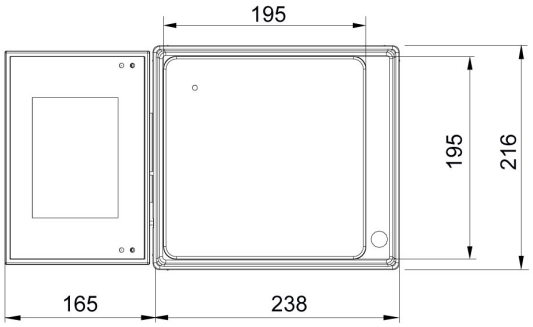

D2 version



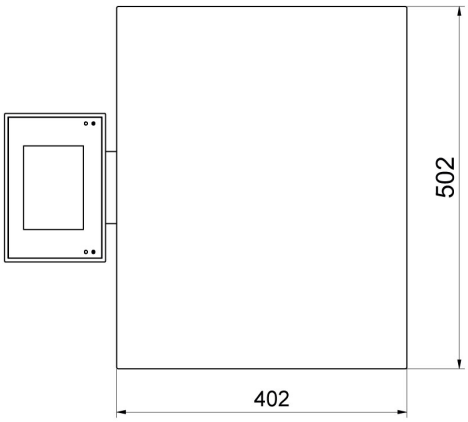

C2 version