radwag.com

CY10.60.C2.K.M2 Precision Balance

WL-225-0013

More information on the website
mirror.radwag.com/us/info,w1,U71

The drawings, photos and graphics used are for illustrative purposes only.

Functions

- Dosing
- Percent Weighing
- Parts counting
- Peak hold
- Formulation
- IR sensors
- Animal weighing
- Statistical Quality Control
- Wi-Fi

Datasheet

Maximum capacity [Max]	60 kg
Minimum load	50 g
Readability [d]	1 g
Verification unit [e]	10 g
Tare range	-60 kg
Repeatability	1,5 g
Linearity	±3 g
Stabilization time	3 s

Adjustment	external
OIML Class	II
Physical parameters	
Leveling system	manual
Display	10" graphic colour touchscreen
Cable length	2,5 m
Weighing pan dimensions	400×500 mm
Packaging dimensions W x D x H	720×620×210 mm
Net weight	13,5 kg
Gross weight	16 kg
Construction	
Protection class	IP 43
Housing	steel + ABS
Communication interface	2×USB-A, USB-C, RS 232 (COM3), HDMI, Ethernet, Wi-Fi, Hotspot
Power supply	Adapter: 100 – 240V AC 50/60Hz 1A; 15V DC 2,4A Balance: 12 – 15V DC 1,6A max; 10–19W*
Operating temperature	+15 – +30 °C
Storage temperature	-25 – +70 °C
Relative humidity	10% – 80% RH no condensation

* Wi-Fi® is a registered trademark of Wi-Fi® Alliance.

Accessories (Additional Fee)

MediaBox
Mild steel powder coated weighing platforms
HRP Platforms High Capacity
RFID Tags
Antivibration tables
Power Adapters
Additional Weighing platforms Module
Additional modules
Platforms in plastic casing
Professional Weighing Tables
Protective cover for balances
Barcode scanners
RS 232, RS 485 cables
Label Printers
Stands, wall mounting kits and mounting brackets
Receipt Printer
Fingerprint Reader
RS 232 – USB Converter

Software (Additional Fee)

• E2R Weighing [WX-010-0099]
• Label Editor R02 [WX-010-0094]
• Scale Editor - EWAG 2.1 [WX-010-0173]
• RAD Key [WX-010-0005]
• RADWAG Remote Desktop [WX-010-0107]
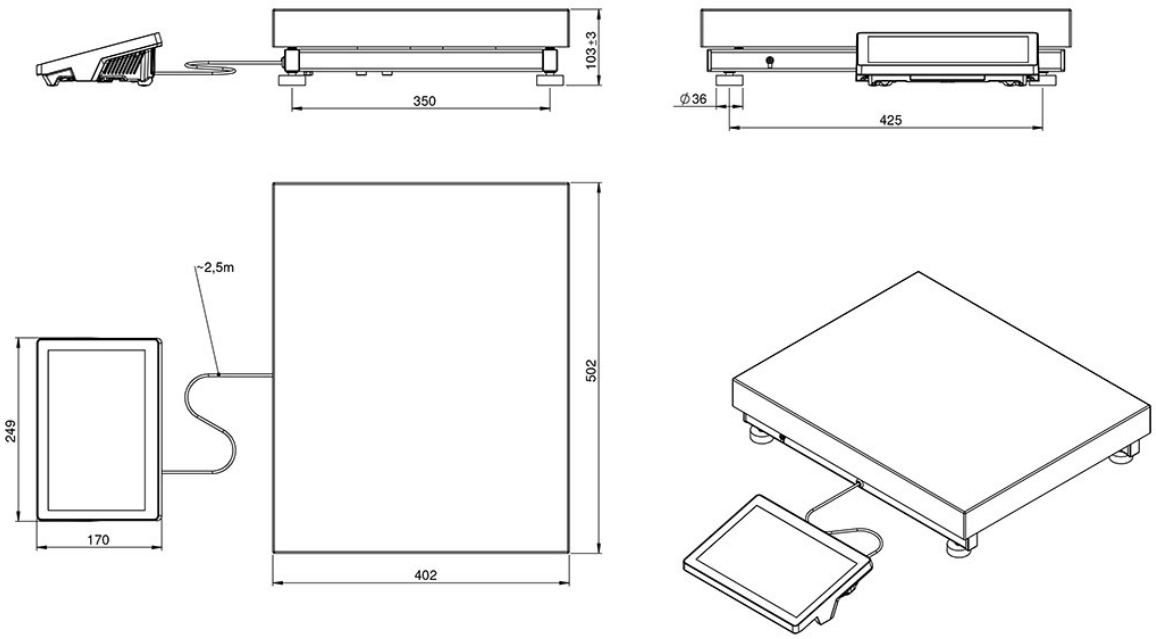
Device dimensions W x D x H