radwag.com

C6 1500kg kantar için rampa

WX-004-0165

More information on the website
mirror.radwag.com/tr/info,w1,QJL

The drawings, photos and graphics used are for illustrative purposes only.

Teknik Veriler

Konstrüksiyon	
Malzeme	toz kaplı çelik
Fiziksel parametreler	
Platform size	800×1400 mm

İle uyumlu (Additional Fee)

HX7.4C Çok Fonksiyonlu Platform Kantar
C315.4 platform kantarları
H315 4C platform kantarları

Cihaz boyutları G x D x Y

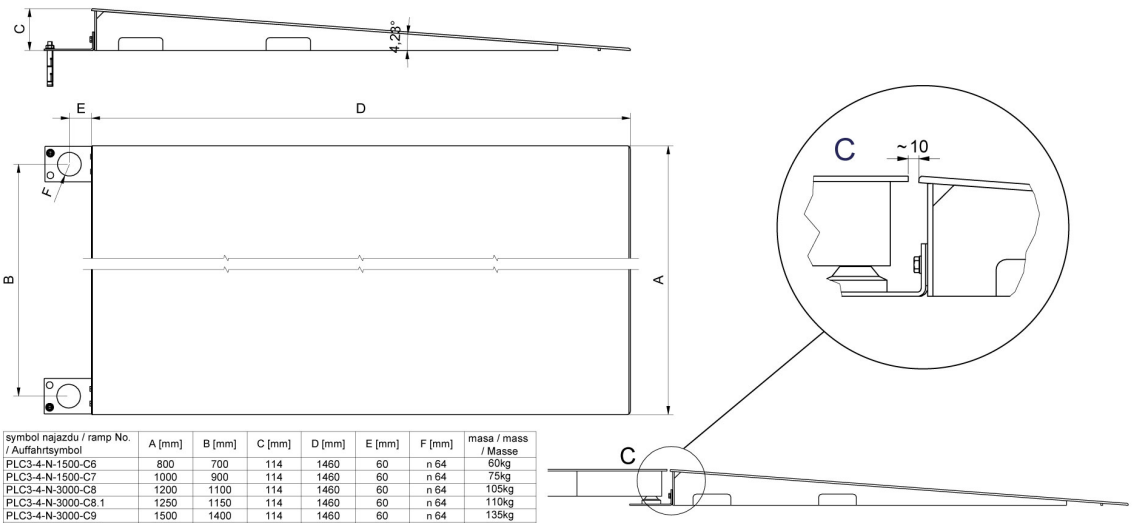

symbol najazdu / ramp No. / Auffahrtsymbol	A [mm]	B [mm]	C [mm]	D [mm]	E [mm]	F [mm]	masa / mass / Masse
PLC3-4-N-1500-C6	800	700	114	1460	60	n 64	60kg
PLC3-4-N-1500-C7	1000	900	114	1460	60	n 64	75kg
PLC3-4-N-3000-C8	1200	1100	114	1460	60	n 64	105kg
PLC3-4-N-3000-C8.1	1250	1150	114	1460	60	n 64	110kg
PLC3-4-N-3000-C9	1500	1400	114	1460	60	n 64	135kg
PLC3-4-N-3000-C11	2000	1900	114	1460	60	n 64	175kg
PLC3-4-N-6000-C9	1500	1380	156	1995	70	n 84	210kg
PLC3-4-N-6000-C11	2000	1880	156	1995	70	n 84	280kg

Ramps made of powder-coated steel

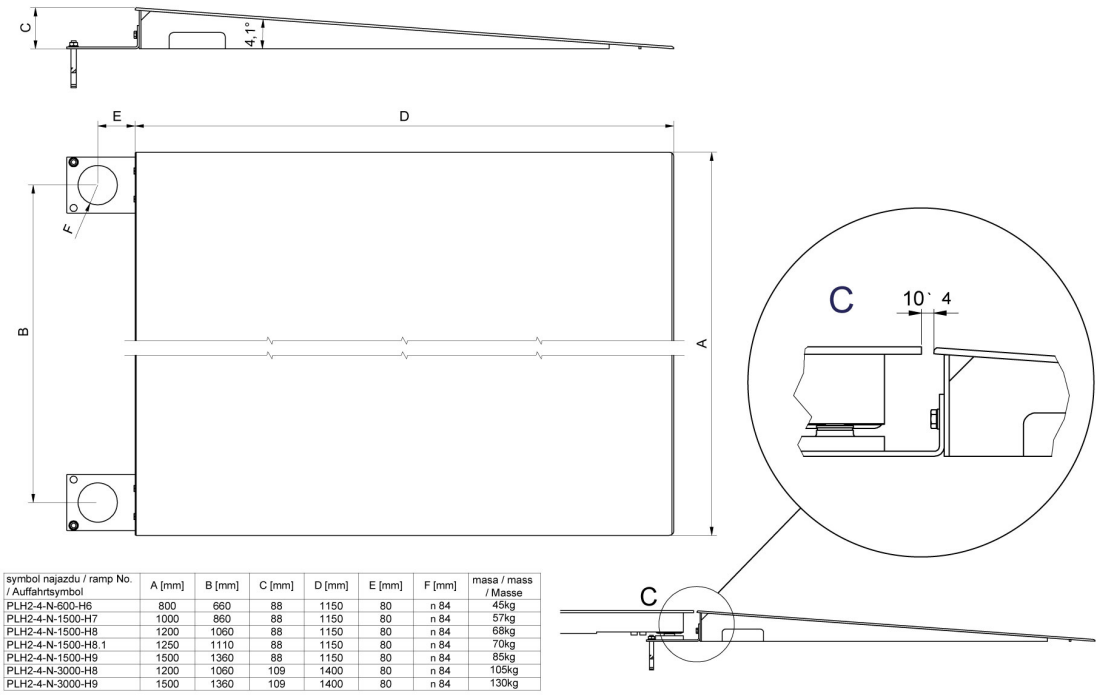

symbol najazdu / ramp No. / Auffahrtsymbol	A [mm]	B [mm]	C [mm]	D [mm]	E [mm]	F [mm]	masa / mass / Masse
PLH2-4-N-600-H6	800	660	88	1150	80	n 84	45kg
PLH2-4-N-1500-H7	1000	860	88	1150	80	n 84	57kg
PLH2-4-N-1500-H8	1200	1060	88	1150	80	n 84	68kg
PLH2-4-N-1500-H8.1	1250	1110	88	1150	80	n 84	70kg
PLH2-4-N-1500-H9	1500	1360	88	1150	80	n 84	85kg
PLH2-4-N-3000-H8	1200	1060	109	1400	80	n 84	105kg
PLH2-4-N-3000-H9	1500	1360	109	1400	80	n 84	130kg

Ramps made of stainless steel