radwag.com

MPS.M.5100/10000.R1 Weighing Module

WX-016-1002

More information on the website
mirror.radwag.com/us/info,w1,O7Y

The drawings, photos and graphics used are for illustrative purposes only.

Datasheet

Maximum capacity [Max]	5100 / 10000 g
Preload range	1000 g
Readability [d]	0,01 / 0,05 g
Repeatability	0,01 / 0,05 g
Linearity	±20 / 50 mg
Warm-up time after connection to power	1 h
Stabilization time	2 s
Adjustment	external
Construction	
Protection class	IP 43
Housing	aluminum
Weighing pan material	aluminum
Communication interface	RS232
Power supply	Adapter: 100 – 240V AC 50/60Hz 0,6A; 12V DC 1,2A Module: 12V DC

Operating temperature	+10 – +40 °C
Relative humidity	40% – 80%
Physical parameters	
Weighing pan dimensions	ø100 mm
Device dimensions W x D x H	266x70x105 mm
Net weight	1,8 kg

Accessories (Additional Fee)

RS 232, RS 485 cables
Antivibration tables
R Terminal (WDM-8)

Software (Additional Fee)

• R Panel [WX-010-0187]
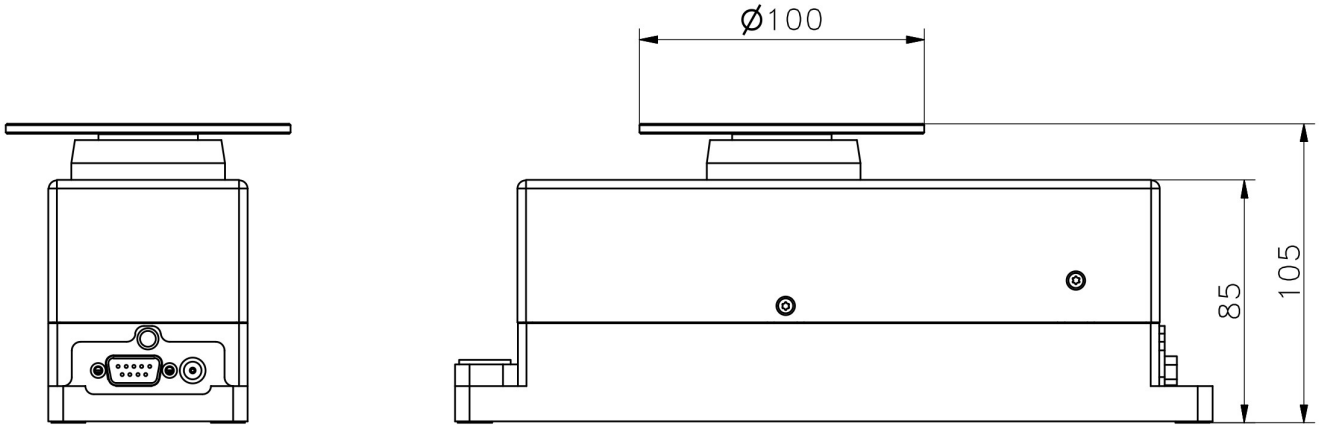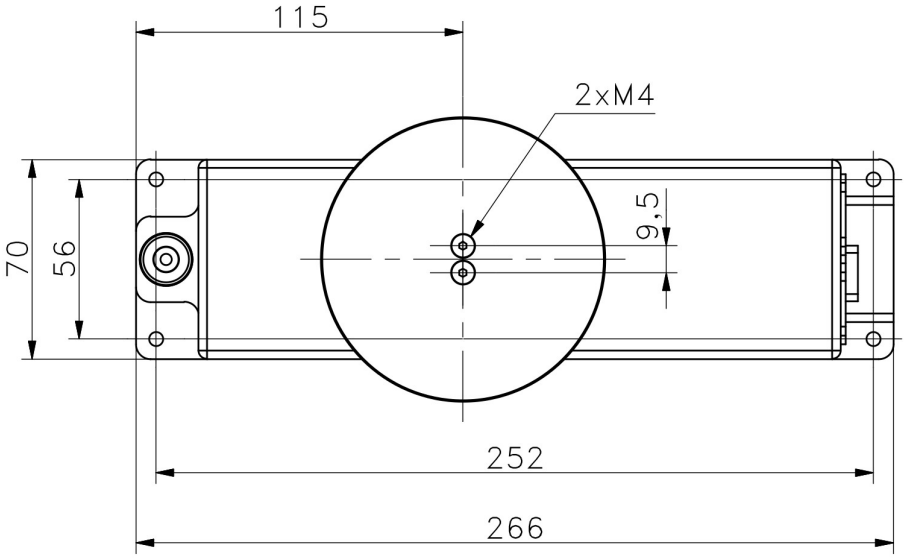
Device dimensions W x D x H