radwag.com

AS 220.R1 PLUS Analytical Balance

WL-104-0229

More information on the website
mirror.radwag.com/us/info,w1,LZY

The drawings, photos and graphics used are for illustrative purposes only.

Functions

- Autotest
- Dosing
- Percent Weighing
- Totalizing
- Parts counting
- Peak hold
- Newton unit measurement
- Statistics
- Checkweighing
- Under-pan weighing
- GLP Procedures
- Animal weighing
- Density determination

Datasheet

Maximum capacity [Max]	220 g
Minimum load	10 mg
Readability [d]	0,1 mg
Tare range	-220 g
Standard repeatability [5% Max]	0,07 mg
Standard repeatability [Max]	0,08 mg

Standard minimum weight (USP)	140 mg
Standard minimum weight (U=1%, k=2)	14 mg
Permissible repeatability [5% Max]	0,09 mg
Permissible repeatability [Max]	0,1 mg
Linearity	±0,2 mg
Stabilization time	2 s
Adjustment	external
OIML Class	-
Physical parameters	
Leveling system	manual
Display	5,3" LCD (backlit)
Weighing chamber doors	manual
Delivery components	Balance, weighing pan, weighing pan shield, bottom cover, power supply.
Weighing pan dimensions	ø100 mm
Packaging dimensions W x D x H	490×400×520 mm
Net weight	7,3 kg
Gross weight	9,3 kg
Construction	
Protection class	IP 43
Communication interface	2×RS232, 2×USB-A (interchangeable), USB-B, Wi-Fi (option)
Power supply	Adapter: 100 – 240V AC 50/60Hz 0,6A; 12V DC 1,2A Balance: 12 – 15V DC 0,4A max
Operating temperature	+10 – +40 °C
Relative humidity	40% – 80%

Repeatability is expressed as a standard deviation from 10 weighing cycles.
Stabilization time depends on the ambient conditions and the dynamics of weighing pan loading; specified for FAST profile.

* Wi-Fi® is a registered trademark of Wi-Fi® Alliance.

Accessories (Additional Fee)

Antivibration tables
Holders for laboratory flasks
Power Adapters
Cigarette lighter receptacle power supply cables
Density determination KIT
USB cable (scale - printer)
Professional Weighing Tables
Barcode scanners
Holders for test tubes and filters
Workstation for pipettes calibration
RS 232, RS 485 cables
Displays
Weighing dishes
Antistatic ionizer
Receipt Printer
AP2-1 Current Loop Unit
Under-pan weighing
RS 232 cables (scale - printer)

Software (Additional Fee)

- RAD Key [WX-010-0005]
- Alibi Reader PC Software [WX-010-0114]
- R Panel [WX-010-0187]
- RADWAG Development Studio [WX-010-0104]

Device dimensions W x D x H

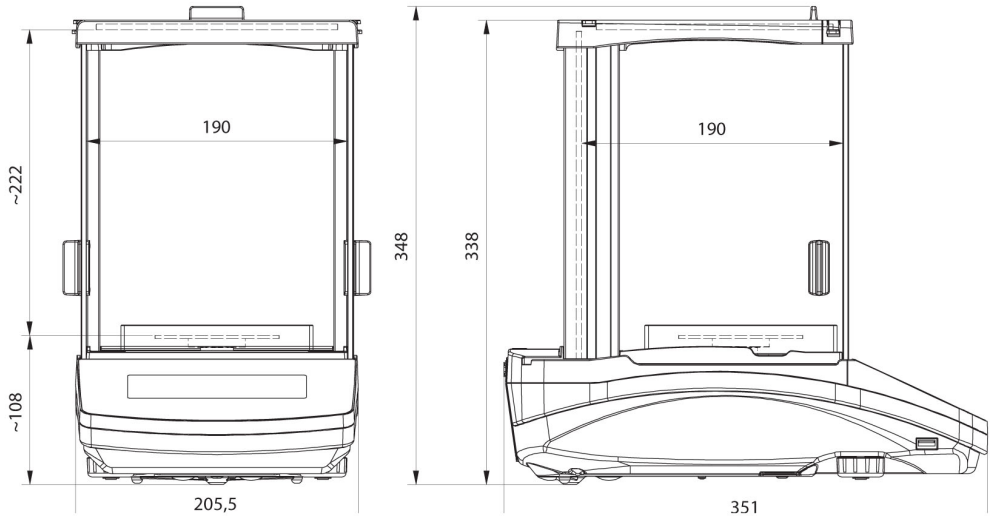

AS R2, d = 0.01 mg

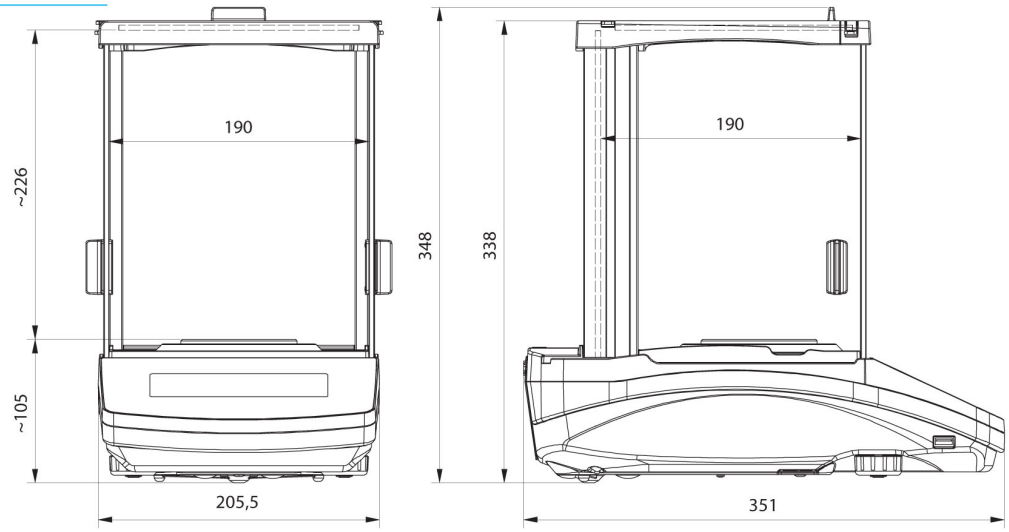

AS R2, AS R1 d = 0.1 mg