radwag.com

PUE 5.15R Weighing Terminal

WX-008-0033

More information on the website
mirror.radwag.com/en/info,w1,KJZ



The drawings, photos and graphics used are for illustrative purposes only.

Functions

- Dosing
- Labelling
- Plus/Minus Control
- Parts counting
- Formulation
- Statistics
- Checkweighing

Datasheet

Metrological parameters	
OIML Class	III
Maximum quantity of divisions from converter	8388608
Maximum quantity of verification units	6000 e
Minimum volatge per verification unit	0.4 µV
Maximum voltage per verification unit	3.25 µV
Minimum load cell impedance	80 Ω
Maximum load cell impedance	1200 Ω
Load cell excitation voltage	5V
Maximum increase of signal	19.5 mV

Metrological parameters	
Connection of load cells	4 or 6 wires
Physical parameters	
Display	15.6” graphic colour touchscreen
Device dimensions W x D x H	490×310×200 mm
Packaging dimensions W x D x H	560×360×240 mm
Net weight	10.5 kg
Gross weight	12 kg
Construction	
Protection class	IP 66
Touch panel	resistive
Housing	Stainless steel
Communication interface	
Communication interface	4×USB 2.0 (2×USB-A, 2×M12 4P), Ethernet - 2×10/100/1000 Mbit (2×RJ45 hermetic), 2×RS232, RS485 (2×M12 8P)
Optional interfaces	external buttons PRINT, TARE, START - terminal with 4IN/4OUT (M12 8P connector) is required, additional weighing platform module - max. 3 pcs, metrological parameters as in the main weighing platform
Electrical parameters	
Power supply	100 – 240 V AC 50/60 Hz
Power consumption max.	75 W
Environmental conditions	
Operating temperature	0 – +40 °C
Storage temperature	-20 – +60 °C
Relative humidity	10% – 85% RH no condensation
Components and software	
Operating system	Microsoft Windows 11 IoT
Processor	Intel® Celeron® J6412
Chipset	Intel® UHD Graphics for 10th Gen Intel® Processors
Memory	16 GB RAM
Data memory	SSD 512 GB

Compatible with (Additional Fee)

Transponder card readers
RS 232, RS 485 cables
Displays
IN/OUT Cables
Additional Weighing platforms Module
Keypad, external switches
USB adatper
Receipt Printer
F1 Mass Standard -
knob weights without adjustment chamber, set
RS 232 – USB Converter

Software (Additional Fee)

• Label Editor R02 [WX-010-0094]

Device dimensions W x D x H

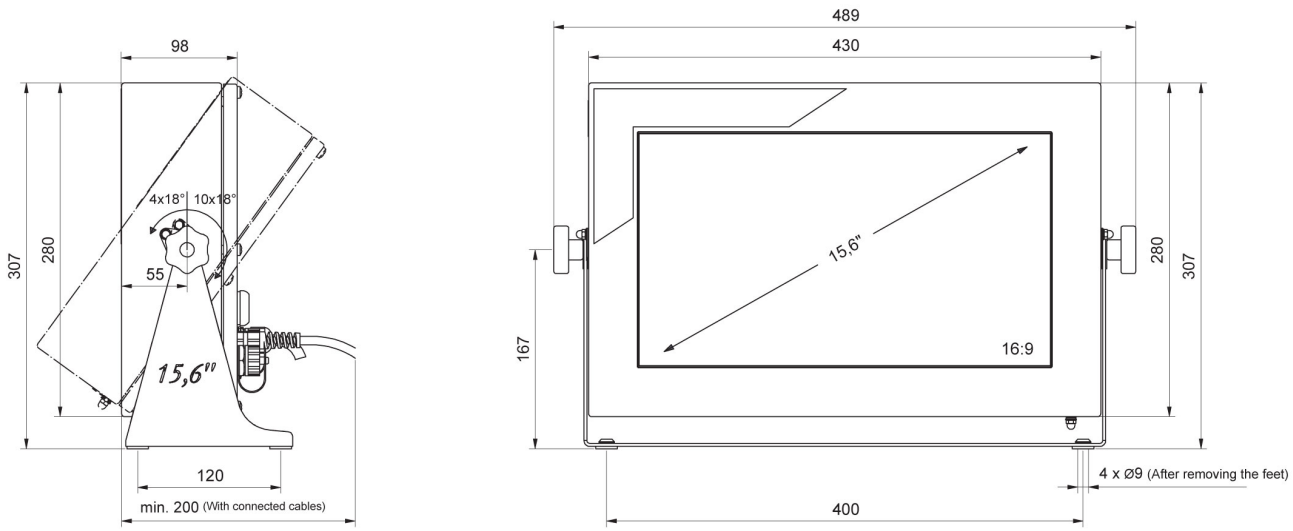

PUE 5.15

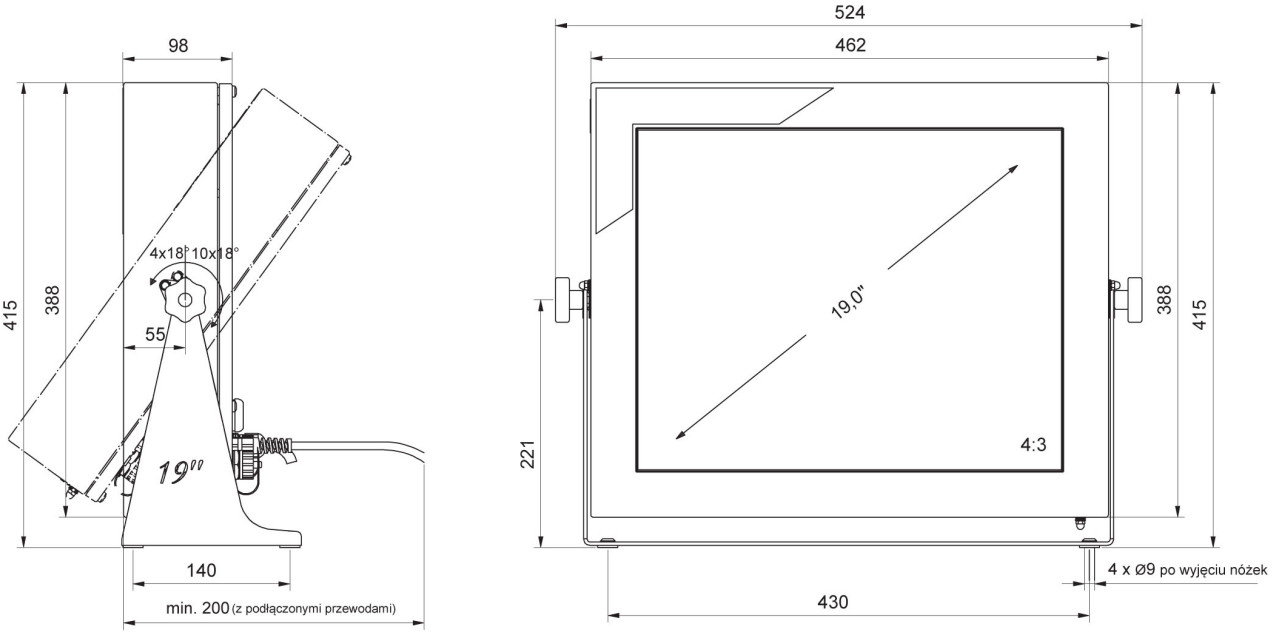

PUE 5.19