radwag.com

MAS.220.R1 Weighing Module

WX-016-0340

More information on the website
mirror.radwag.com/en/info,w1,IAI



The drawings, photos and graphics used are for illustrative purposes only.

Datasheet

Metrological parameters	
Maximum capacity [Max]	220 g
Preload range	22 g
Readability [d]	0.1 mg
Repeatability	0.12 mg
Linearity	±0.2 mg
Warm-up time after connection to power	1 h
Stabilization time	2 s
Adjustment	external
Construction	
Protection class	IP 43
Housing	aluminum
Weighing pan material	Stainless steel
Communication interface	
Communication interface	RS232

Electrical parameters	
Power supply	Adapter: 100 – 240V AC 50/60Hz; 12V DC 1.2A Module: 12V DC
Environmental conditions	
Operating temperature	+10 – +40 °C
Relative humidity	40% – 80%
Physical parameters	
Weighing pan dimensions	ø42 mm
Device dimensions W x D x H	254x127x138 mm
Packaging dimensions W x D x H	440×370×360 mm
Net weight	2.9 kg
Gross weight	5 kg



Accessories (Additional Fee)

Antivibration Tables
R Terminal (WDM-8)
RS 232, RS 485 cables

Software (Additional Fee)

• R-Panel [WX-010-0187]

Device dimensions W x D x H

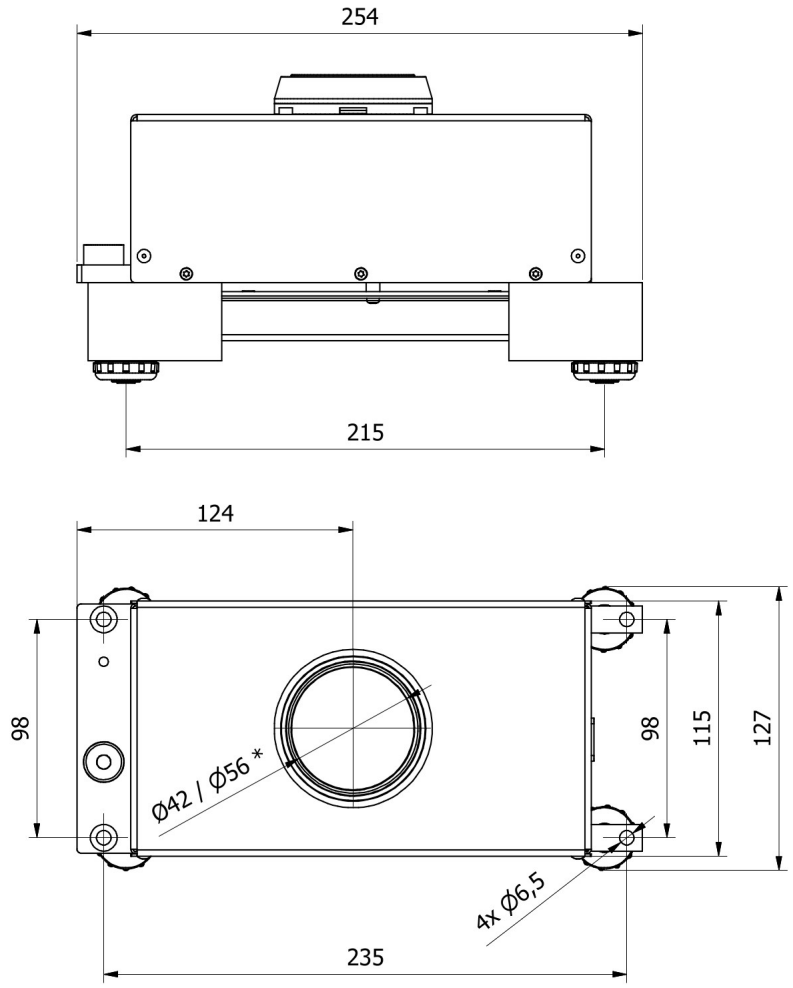

* - Ø42 - MAS.50.R1; MAS.80.R1; MAS.220.R1,
MAS.50.R2; MAS.80.R2; MAS.220.R2.

- Ø56 - MAS.220/440.R1; MAS.640.R1; MAS.1000.R1,
MAS.220/440.R2; MAS.640.R2; MAS.1000.R2.