XA17-1 - Adapter for Pipettes calibration 17 ml XA 5Y

WX-001-0454

More information on the website
mirror.radwag.com/en/info,w1,H5S



The drawings, photos and graphics used are for illustrative purposes only.

Overview

XA17-1 pipette calibration adapter enables calibration and/or verification of piston pipettes by means of a gravimetric method using the XA analytical balances. Vessel capacity: 17 ml.

Set content:
• base
• weighing pan
• weighing vessel
• evaporation ring
• glass chamber with an opening for dosing

Evaporation ring is an integral part of the adapter that increases relative humidity inside the weighing chamber. With this evaporation of the liquid during calibration/verification is stopped. An integrated weighing pan enables centric loading of the vessel in the weighing chamber. The weighing pan and the vessel are housed in a glass chamber featuring an opening allowing the user to dispense liquid through it, and reducing air drafts.

Adapters for Pipettes Calibration

Pipette calibration adapters are intended for calibration and verification of piston pipettes using gravimetric method. Use of the pipette calibration adapter reduces maximum capacity of the balance by the mass of the weighing vessel. The table below, which presents the minimum requirements in accordance with ISO 8655-6:2022 standard, enables to select suitable adapter for pipette calibration and respective balance version. The parameters of the balance have been selected so that the expanded uncertainty of measurement in use is less than ¼ of the maximum permissible error of the test object.

Nominal volume of apparatus under test V	Resolution (d) mg	Repeatability (s)[3]mg	Recommended balance											
			Microbalances MYA 5Y	Microbalances XA 5Y.M.A				Analytical balances XA 5Y.A						
0,5 µl ≤ V < 20 µl	0,001[c] 0,01[d]	0,006[c, e] 0,03[d]	MYA 21.5Y	XA 6/21.5Y.M.A	XA 21.5Y.M.A	XA 21/52.5Y.M.A	XA 53.5Y.M.A							
20 µl ≤ V < 200 µl	0,01	0,025						XA 52.5Y.A	XA 110.5Y.A	XA 82/220.5Y.A		XA 120/250.5Y.A		
200 µl ≤ V ≤ 10 ml	0,1	0,2												
Adapter for pipette calibration			MY11	XA11-2	XA11-2	XA11-2	XA11-2	XA17-2	XA17-2	XA17-2	XA100-2	XA17-2	XA100-2	
Maximum vessel capacity			11 ml	11 ml	11 ml	11 ml	11 ml	17 ml	17 ml	17 ml	100 ml	17 ml	100 ml	
Weighing vessel mass			~ 10 g	~ 10 g	~ 10 g	~ 10 g	~ 10 g	~ 11 g	~ 11 g	~ 11 g	~ 65 g	~ 11 g	~ 65 g	

[a] The repeatability values, in this table, apply in the volumen determination of a single channel pipette. When a single-channel balance is used for volumen determination of multichannel pipettes the repeatability values are double the values of this table.

[c] Single-channel balance.

[d] Multichannel balance, only valid for multi-channel pipettes. Multi-channel balances of 0,01 mg readability may be uses to test multi-channel pipettes with nominla volumes below 20 µl only if the expanded uncertainty in use is less than ¼ of the maximum permissible systematic error of the test object.

[e] For single-channel pipettes of nominal volumes of less than 2 µl, a balance with repeatability better than the values in the table shall be used so that the expanded uncertainty in use is less than ¼ of the maximum permissible systematic error of the test object.

Compatible with (Additional Fee)

XA 5Y Analytical Balance

Balance Storage Case

Device dimensions W x D x H

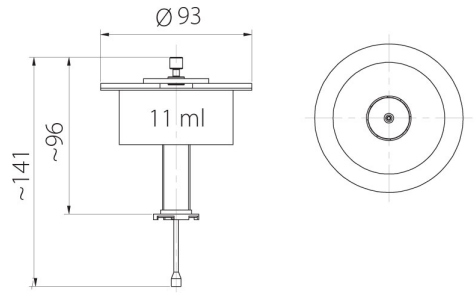

MY11

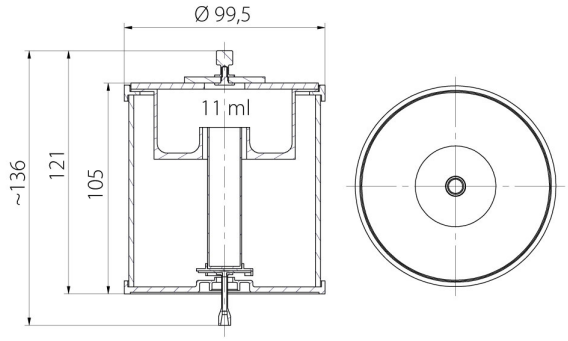

XA11

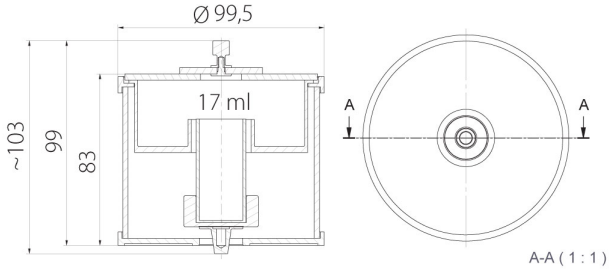

XA17

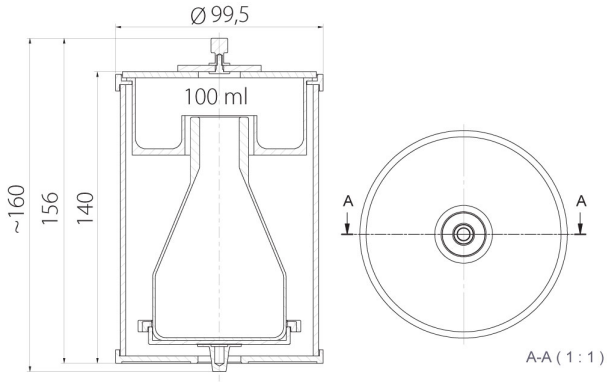

XA100