radwag.com

CY10.30.C2.K.M3 Multifunctional Scale

WP-125-0025

More information on the website
mirror.radwag.com/en/info,w1,H4R

The drawings, photos and graphics used are for illustrative purposes only.

Functions

- Dosing
- Percent Weighing
- Parts counting
- Peak hold
- Formulation
- IR sensors
- Animal weighing
- Statistical Quality Control
- Wi-Fi

Datasheet

Metrological parameters	
Maximum capacity [Max]	30 kg
Minimum load	200 g
Readability [d]	10 g
Verification unit [e]	10 g
Tare range	-30 kg
Max readability for non-verified scale	1 g
Stabilization time	2 s

Metrological parameters	
Adjustment	external
OIML Class	III
Physical parameters	
Leveling system	manual
Display	10" graphic colour touchscreen
Cable length	2.5 m
Weighing pan dimensions	400×500 mm
Packaging dimensions W x D x H	720×620×210 mm
Net weight	12.1 kg
Gross weight	14.1 kg
Construction	
Protection class	IP 65 construction, IP 43 terminal
Housing	steel + ABS
Communication interface	
Communication interface	2×USB-A, USB-C, RS 232 (COM3), HDMI, Ethernet, Wi-Fi, Hotspot
Electrical parameters	
Power supply	Adapter: 100 – 240V AC 50/60Hz 1A; 15V DC 2.4A Balance: 12 – 15V DC 1.6A max; 10–19W*
Environmental conditions	
Operating temperature	-10 – +40 °C
Storage temperature	-25 – +70 °C
Multiple range	YES
Features of use	
Max number of platforms	max.2

Stabilization time depends on the ambient conditions and the dynamics of weighing pan loading; specified for FAST profile.
*Power consumption depends on the terminal configuration and the number and type of external devices connected.

* Wi-Fi® is a registered trademark of Wi-Fi® Alliance.

Additional fee for verification

Accessories (Additional Fee)

MediaBox
Mild steel powder coated weighing platforms
RFID Tags
Power Adapters
Additional Weighing platforms Module
Additional modules
Platforms in plastic casing
Protective cover for balances
Barcode scanners
Label Printers
RS 232, RS 485 cables
Stands, wall mounting kits and mounting brackets
Fingerprint Reader
RS 232 – USB Converter
Receipt Printer

Software (Additional Fee)

- E2R Weighing [WX-010-0099]
- Label Editor R02 [WX-010-0094]
- Scale Editor 2.1 [WX-010-0173]
- RAD Key [WX-010-0005]
- RADWAG Remote Desktop [WX-010-0107]
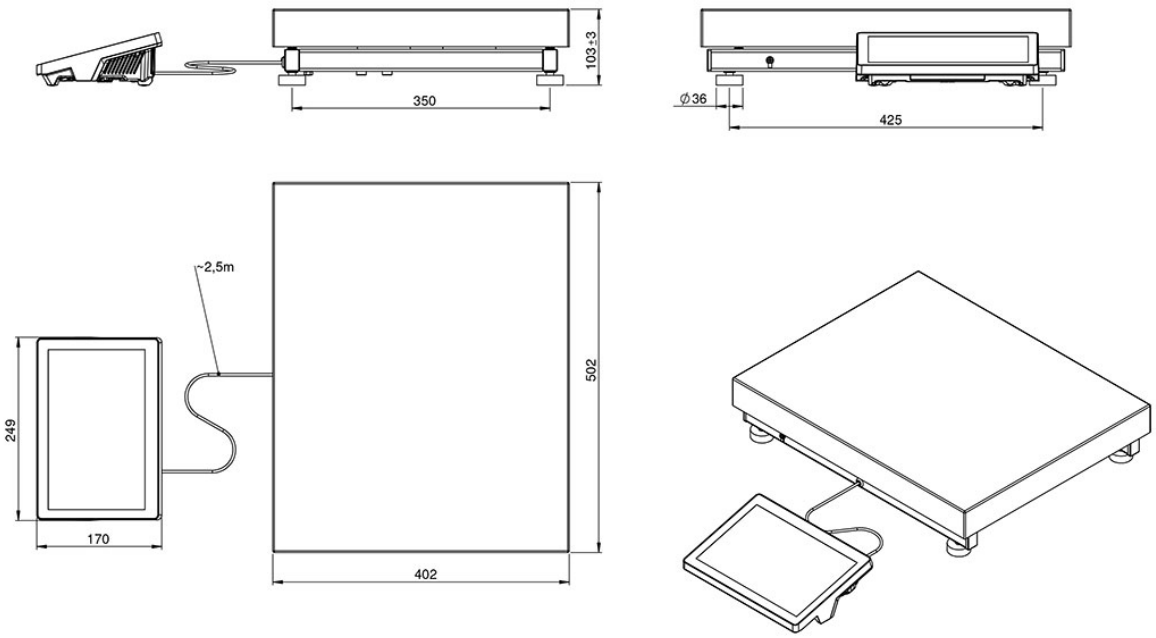
Device dimensions W x D x H