radwag.com

MWMH 1000-3 Electromagnetic Compensation Weighing Module

WX-016-0229

More information on the website
mirror.radwag.com/en/info,w1,GSR



The drawings, photos and graphics used are for illustrative purposes only.

Datasheet

Metrological parameters	
Maximum capacity [Max]	10 kg
Minimum load	20 g
Preload range	4 – 7 kg
Readability [d]	0.1 g
Verification unit [e]	1 g
Tare range	-10 kg
Repeatability	0.1 g
Stabilization time	<0.1 s
Adjustment	external
OIML Class	III
Sensitivity temperature drift	2×10^{-6}/°C×Rt
Construction	
Protection class	IP 69 K
Material	Stainless steel

Communication interface	
Communication interface	RS232, Ethernet, 2×IN / 2×OUT
Electrical parameters	
Power supply	12 – 24 V DC
Power consumption max.	5 W
Environmental conditions	
Operating temperature	+10 – +40 °C
Storage temperature	-20 – +50 °C
Relative humidity	15% – 80%
Physical parameters	
Weighing pan dimensions	212×174 mm
Device dimensions W x D x H	344×224×166 mm
Packaging dimensions W x D x H	580×413×360 mm
Net weight	12.4 kg
Gross weight	15 kg



Accessories (Additional Fee)

RS 232 – USB Converter

Software (Additional Fee)

- MWMH Manager [WX-010-0103]
- R-Lab [WX-010-0080]
- RADWAG Development Studio [WX-010-0104]
- RAD Key [WX-010-0005]
- Scale Editor 2.1 [WX-010-0173]

Device dimensions W x D x H

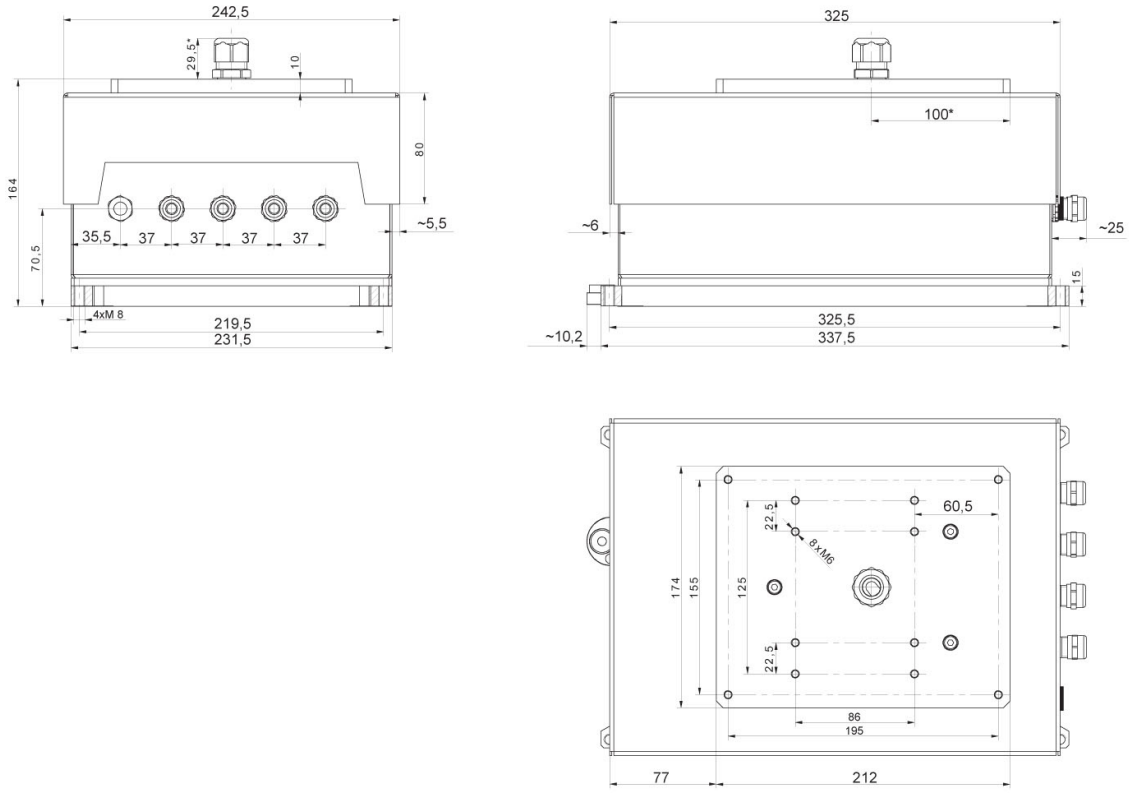

MWMH IP 69K