radwag.com

High Resolution Platforms
PL.150.1.HRP.EX.H

WX-009-1147

More information on the website
mirror.radwag.com/en/info,w1,F5K



The drawings, photos and graphics used are for illustrative purposes only.

Datasheet

Metrological parameters	
Maximum capacity [Max]	150 kg
Preload range	30 kg
Readability [d]	1 g
Tare range	-150 kg
Repeatability	1.5 g
Linearity	±3 g
Adjustment	internal (automatic)
Physical parameters	
Cable length	10 m
Weighing pan dimensions	800×600 mm
Packaging dimensions W x D x H	1000×800×307 mm
Net weight	71.5 kg
Gross weight	119 kg

Construction	
Protection class	IP 66 / 67
ATEX Certification	II 3G Ex ic IIC T4 Gc II 3D Ex ic IIIC T60°C Dc
IECEx Certification	Ex ic IIC T4 Gc Ex ic IIIC T60°C Dc
Construction	Stainless steel AISI304
Weighing pan material	Stainless steel AISI304
Communication interface	
Communication interface	RS485
Electrical parameters	
Power supply	100 – 240 V AC 50/60 Hz
Environmental conditions	
Operating temperature	+10 – +40 °C
Relative humidity	15% – 80%



Accessories (Additional Fee)

PUE HX5.EX Weighing Terminal
Ex-Scale-Intended Intrinsically Safe Power Supply for PUE HX5.EX Weighing Terminal
Receipt Printer

Software (Additional Fee)

- MWMH Manager [WX-010-0103]
- RADWAG Development Studio [WX-010-0104]
- RAD Key [WX-010-0005]

Device dimensions W x D x H

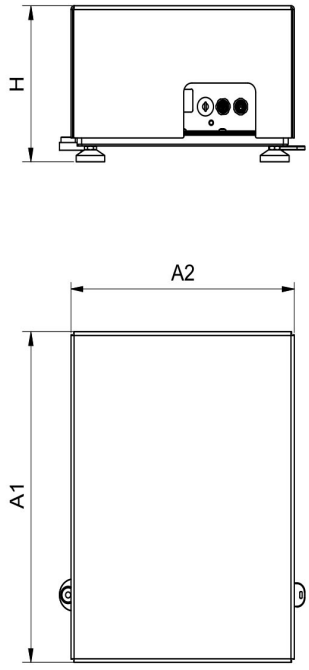

PL.16 - 32.HRP.H

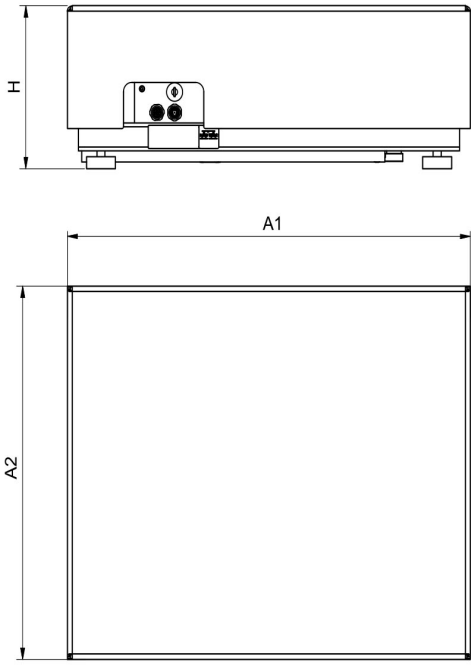

PL.62-2000.HRP.H

Scale type	A1	A2	H
PL.(16-32).HRP.H	360	280	180±5
PL.(62-150).HRP.H	500	400	180±5
PL.150.2.HRP.H	500	500	180±5
PL.(150.1-300).HRP.H	800	600	180±5
PL.(300.1-1100).HRP.H	1000	800	180±5
PL.(2000).HRP.H	1250	1000	180±5

Dimensions in mm