High Resolution Platforms PL.600.HRP.EX

WX-009-0278

More information on the website
mirror.radwag.com/en/info,w1,DY2



The drawings, photos and graphics used are for illustrative purposes only.

Datasheet

Metrological parameters	
Maximum capacity [Max]	600 kg
Preload range	60 kg
Readability [d]	5 g
Tare range	-600 kg
Repeatability	7.5 g
Linearity	±15 g
Adjustment	internal (automatic)
Physical parameters	
Cable length	10 m
Weighing pan dimensions	1000×800 mm
Packaging dimensions W x D x H	1200×1000×436 mm
Net weight	128 kg
Gross weight	188 kg

Construction	
Protection class	IP 67
ATEX Certification	II 3G Ex ic IIB T4 Gc
IECEx Certification	Ex ic IIB T4 Gc
Construction	mild steel St3S
Weighing pan material	Stainless steel AISI304
Communication interface	
Communication interface	RS485
Electrical parameters	
Power supply	100 – 240 V AC 50/60 Hz
Environmental conditions	
Operating temperature	+10 – +40 °C
Relative humidity	15% – 80%



Accessories (Additional Fee)

PUE HX5.EX Weighing Terminal
Ex-Scale-Intended Intrinsically Safe Power Supply for PUE HX5.EX Weighing Terminal
Receipt Printer

Software (Additional Fee)

- MWMH Manager [WX-010-0103]
- RADWAG Development Studio [WX-010-0104]
- RAD Key [WX-010-0005]

Device dimensions W x D x H

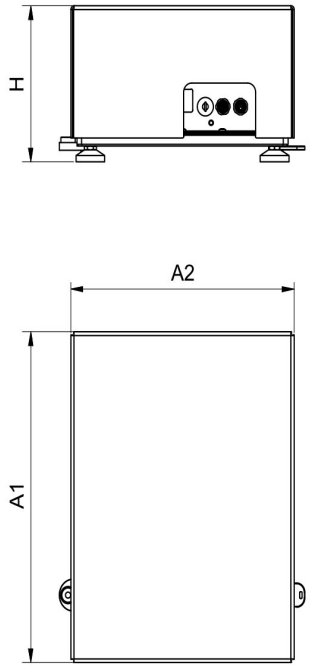

PL.16 - 32.HRP

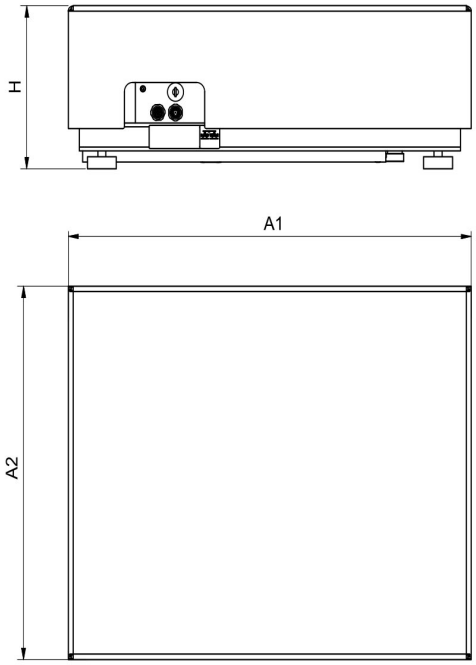

PL.62-2000.HRP

Scale type	A1	A2	H
PL.(16-32).HRP	360	280	180±5
PL.(62-150).HRP	500	400	180±5
PL.150.2.HRP	500	500	180±5
PL.(150.1-300).HRP	800	600	180±5
PL.(300.1-1100).HRP	1000	800	180±5
PL.(2000).HRP	1250	1000	180±5

Dimensions in mm