radwag.com

WLC 6/A2 Precision Balance

WL-206-0003

More information on the website
mirror.radwag.com/en/info,w1,BB3



The drawings, photos and graphics used are for illustrative purposes only.

Functions

- Plus/Minus Control
- Percent Weighing
- Totalizing
- Parts counting
- Internal battery
- Peak hold
- Newton unit measurement
- Under-pan weighing

Datasheet

Metrological parameters	
Maximum capacity [Max]	6 kg
Minimum load	5 g
Readability [d]	0.1 g
Verification unit [e]	1 g
Tare range	-6 kg
Repeatability	0.1 g
Linearity	±0.2 g
Stabilization time	3 s
Adjustment	-

Metrological parameters	
OIML Class	II
Physical parameters	
Leveling system	manual
Display	4.3” LCD (backlit)
Weighing pan dimensions	195×195 mm
Packaging dimensions W x D x H	430×270×190 mm
Net weight	2.64 kg
Gross weight	3.5 kg
Construction	
Protection class	IP 43
Communication interface	
Communication interface	2×RS232, USB-A, USB-B
Electrical parameters	
Power supply	Adapter: 100 – 240V AC 50/60Hz 0.6A; 12V DC 1.2A Balance: 10 – 15VDC 0.6A max
Operation time on batteries	15 h (average time)
Environmental conditions	
Operating temperature	+15 – +30 °C
Relative humidity	10% – 85% RH no condensation

Repeatability is expressed as a standard deviation from 10 weighing cycles.
Stabilization time depends on the ambient conditions and the dynamics of weighing pan loading; specified for FAST profile.



Accessories (Additional Fee)

Balance Storage Case
Antivibration Tables
Power Adapters
RS 232 cables (scale - printer)
Cigarette lighter receptacle power supply cables
Displays
Under-pan weighing
RS 232, RS 485 cables
RS 232 – Ethernet Converter
RS 232 – USB Converter
Protective cover for balances
RS 232 – RS 485 Converter
Receipt Printer

Software (Additional Fee)

• RAD Key [WX-010-0005]
• R-Lab [WX-010-0080]
• Alibi Reader [WX-010-0114]
• Scale Editor 2.1 [WX-010-0173]

Device dimensions W x D x H

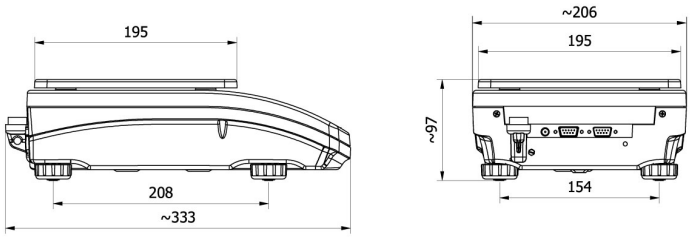

WLC A2

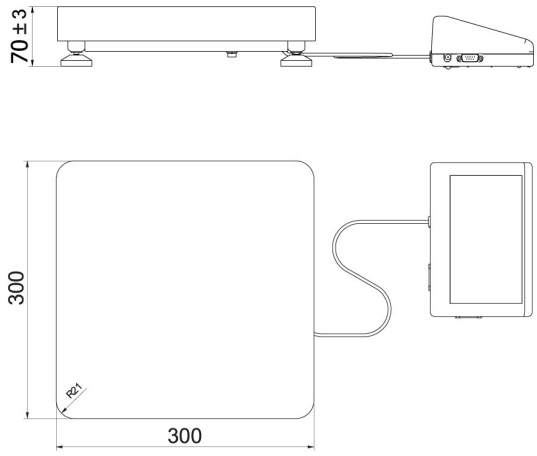

WLC F1/K

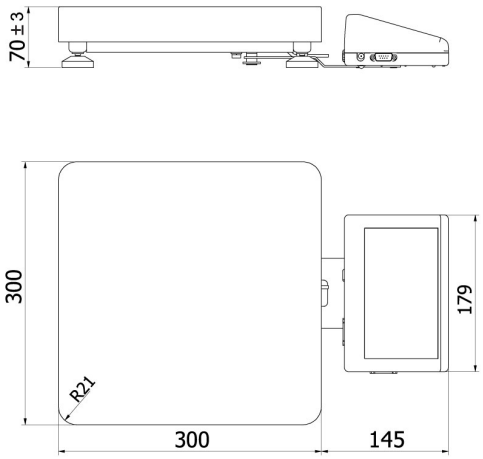

WLC F1/R

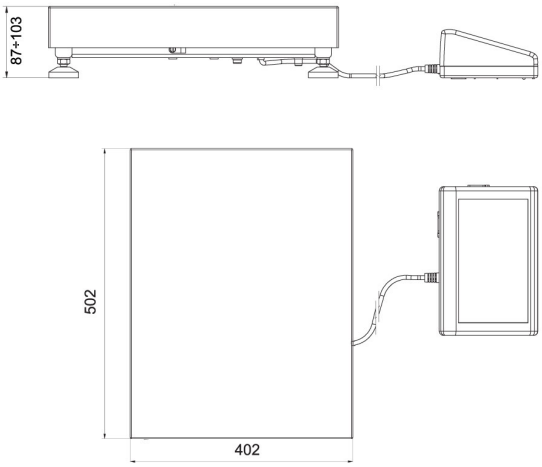

WLC C2/K

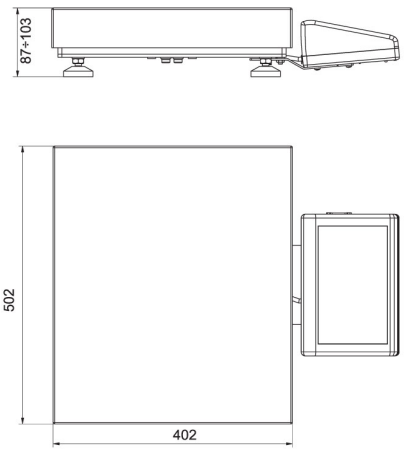

WLC C2/R