radwag.com

APP 64.5Y.KO Mass Comparator

WL-407-0038

More information on the website
mirror.radwag.com/en/info,w1,8M2

The drawings, photos and graphics used are for illustrative purposes only.

Datasheet

Metrological parameters	
E2 Calibration Range	50 kg
F1 Calibration Range	20 – 50 kg
F2 Calibration Range	5 – 50 kg
M1 Calibration Range	1 – 50 kg
M2 Calibration Range	1 – 50 kg
Maximum capacity [Max]	64 kg
Readability [d]	10 mg
Standard repeatability [5% Max]	13 mg
Standard repeatability [Max]	18 mg
Permissible repeatability	30 mg
Linearity	±70 mg
Eccentricity (tested load)	2d / 1 mm
Electric compensation range	0 – +64 kg
Stabilization time	20 s
Adjustment	external

Physical parameters	
Display	10" graphic colour touchscreen
Weighing pan dimensions	ø300 (ø400) mm
Weighing device dimensions	385×215×420 mm
Controling device dimensions	249×170×72 mm
Packaging dimensions W x D x H	1160×650×700 mm
Net weight	26 kg
Gross weight	40 kg
Construction	
Supplementary weights internal	-
Supplementary weights external	-
Communication interface	
Communication interface	2×USB-A, USB-C, RS 232 (COM3), HDMI, Ethernet, Wi-Fi, Hotspot
Environmental conditions	
Operating temperature	+10 – +40 °C
Operating temperature change rate	±0.5 °C / 12 h
Relative humidity	30% – 70%
Relative humidity change rate	±10% / 4 h

Repeatability is expressed as a standard deviation determined for 6 ABBA cycles. Standard deviation is experimentally determined under ambient conditions for calibration of F2 class mass standards specified in OIML R111 (Table C.1.) document.

* Wi-Fi® is a registered trademark of Wi-Fi® Alliance.

Accessories (Additional Fee)

Self-centering pan for APP KO comparator
Anti-Draft Chamber for Mass Compartors
RFID Tags
Additional modules
Protective cover for balances
Barcode scanners
Antivibration Tables
RS 232, RS 485 cables
Label Printers
THBR 2.0 System - Ambient Conditions Monitoring
Receipt Printer
Fingerprint Reader
RS 232 cables (scale - printer)

Software (Additional Fee)

• RAD Key [WX-010-0005]
• RMCS System Network Management of Calibration Process [WX-010-0048]
• RMCS Lite [WX-010-0164]
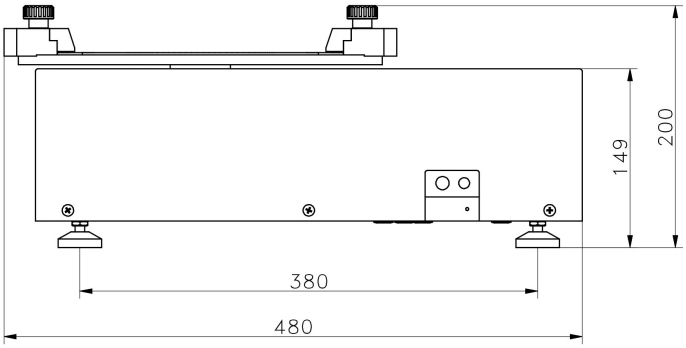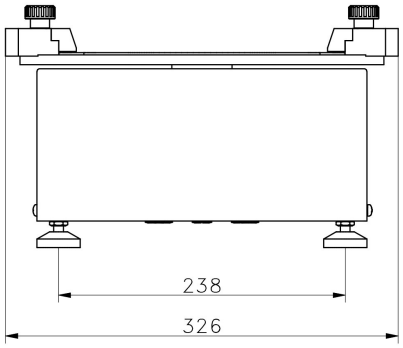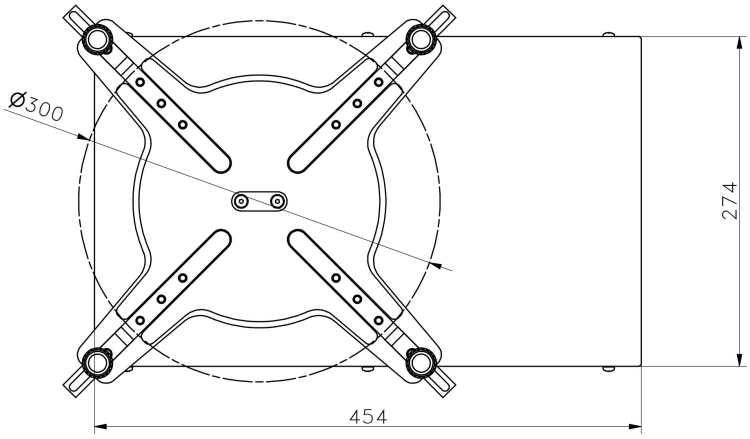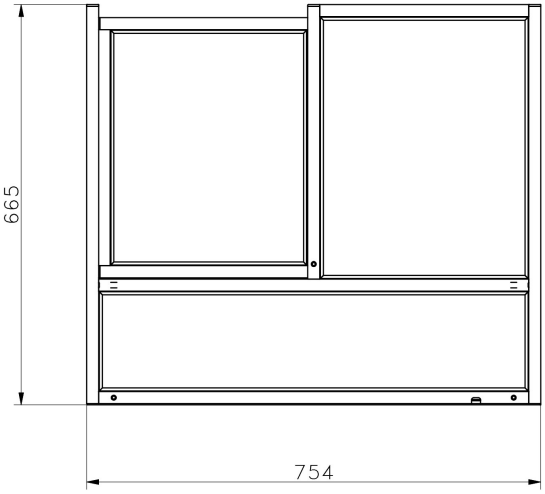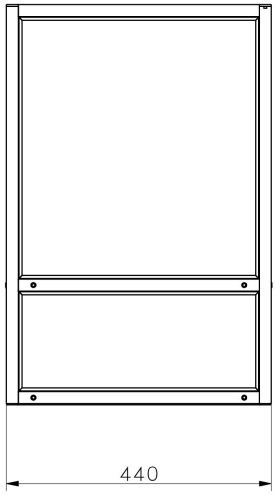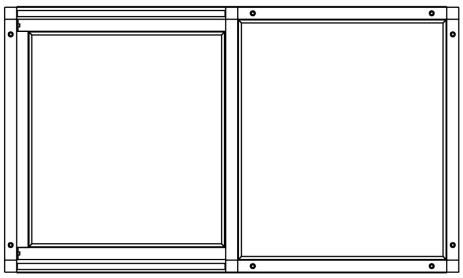
Device dimensions W x D x H