radwag.com

C32.6.F1.M Multifunctional Scale

WP-120-0012

More information on the website
mirror.radwag.com/en/info,w1,8JQ



The drawings, photos and graphics used are for illustrative purposes only.

Functions

- Labelling
- Plus/Minus Control
- Percent Weighing
- Totalizing
- Parts counting
- Newton unit measurement
- Statistics
- IR sensors
- GLP Procedures
- Replaceable unit
- ALIBI Memory

Datasheet

Metrological parameters	
Maximum capacity [Max]	6 kg
Minimum load	40 g
Readability [d]	2 g
Verification unit [e]	2 g
Tare range	-6 kg
Max readability for non-verified scale	0.2 g
OIML Class	III

Physical parameters	
Display	5” graphic colour
Weighing pan dimensions	300×300 mm
Packaging dimensions W x D x H	570×400×400 mm
Net weight	5.5 kg
Gross weight	6.5 kg
Construction	
Protection class	IP 65 construction, IP 43 terminal
Construction	mild steel St3S
Weighing pan material	Stainless steel AISI304
Communication interface	
Communication interface	2×RS232, USB-A, USB-B, Ethernet, 4 IN / 4 OUT (digital), Wi-Fi
Electrical parameters	
Power supply	100 – 240 V AC 50/60 Hz
Power consumption max.	10 W
Optional power supply	internal rechargeable battery
Operation time on batteries	operation time up to 5 h
Environmental conditions	
Operating temperature	-10 – +40 °C

* Optional equipment at additional cost

* Wi-Fi® is a registered trademark of Wi-Fi® Alliance.

Additional fee for verification

Accessories (Additional Fee)

Displays
Transponder card readers
Power Adapters
RS 232 cables (scale - printer)
Cigarette lighter receptacle power supply cables
Barcode scanners
RS 232, RS 485 cables
Label Printers
Antivibration Tables
Keypad, external switches
Stands, wall mounting kits and mounting brackets
Additional modules
Receipt Printer
AP2-1 Current Loop Unit

Software (Additional Fee)

• E2R Weighing [WX-010-0099]
• Label Editor R02 [WX-010-0094]
• R-Lab [WX-010-0080]
• RADWAG Development Studio [WX-010-0104]
• RAD Key [WX-010-0005]
• Alibi Reader [WX-010-0114]
• Scale Editor 2.1 [WX-010-0173]

Device dimensions W x D x H

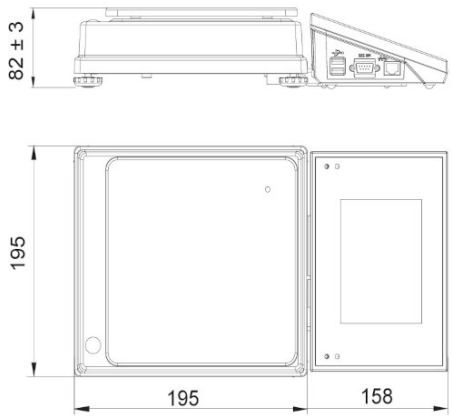

C32.D2

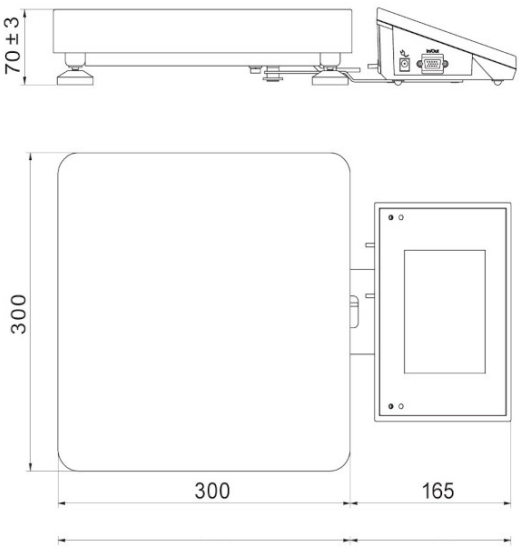

C32.F1.R

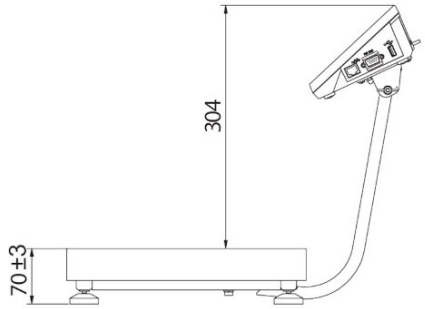

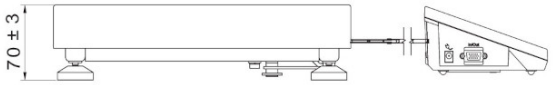

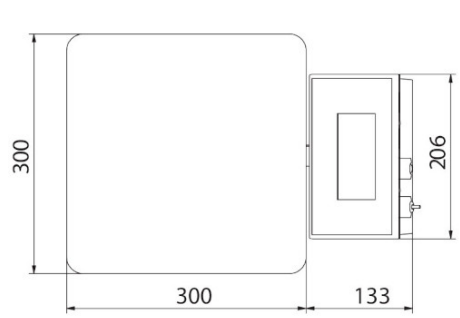

C32.F1.M

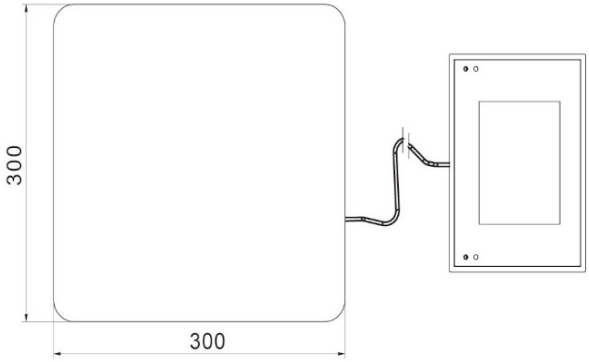

C32.F1.K