radwag.com

PLC/4/1500/C8 Platform

WX-009-0025

More information on the website
mirror.radwag.com/en/info,w1,893

The drawings, photos and graphics used are for illustrative purposes only.

Datasheet

Metrological parameters	
Maximum capacity [Max]	1500 kg
Readability [d]	500 g
Construction	
Protection class	IP 65 construction, IP 67 cell
Construction	mild steel St3S
Weighing pan material	mild steel St3S
Physical parameters	
Weighing pan dimensions	1200×1200 mm
Weighing platform height	120 ± 10 mm

Readability accuracy – expected value, dependent on the parameters of the measuring transmitter used.

Accessories (Additional Fee)

CY10 Scales for PGC
PUE CY10 Weighing Terminal
CY10 Multifunctional Scale
PUE 5 Weighing Terminal
CY10 Precision Balance
PUE HX7 Weighing Terminal
PUE C32 Weighing Terminal
PUE 7.1 Weighing Terminal
PUE C315 Weighing Terminal
PUE HY10 Weighing Terminal
Frame for embedded scales
PUE H315 Weighing Terminal

Device dimensions W x D x H

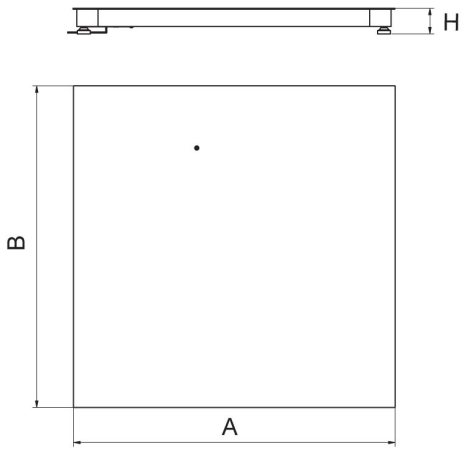

Platform	A	B	H
PLC/4/C6	800	800	120 ±10
PLC/4/C7	1000	1000	120 ±10
PLC/4/C8	1200	1200	120 ±10
PLC/4/C8/9	1200	1500	120 ±10
PLC/4/C9	1500	1500	120 ±10
PLC/4/C10	1500	2000	120 ±10
PLC/4/C11	2000	2000	120 ±10

dimensions in mm

PLC/4/C

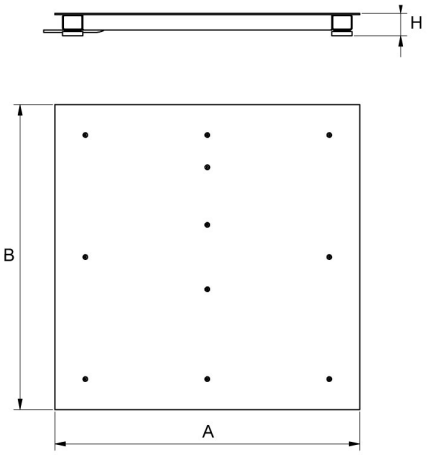

Platform	A	B	H
PL/4/H6	800	800	88 ±2
PL/4/H7	1000	1000	88 ±2
PL/4/H8	1200	1200	88 ±2
PL/4/H8/9	1200	1500	88 ±2
PL/4/H9	1500	1500	88 ±2
PL/4/H10	1500	2000	111 ±2

dimensions in mm

PL/4/H

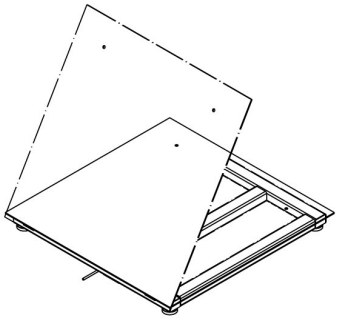

PL/4/H6/Z
PL/4/H7/Z
PL/4/H8/Z

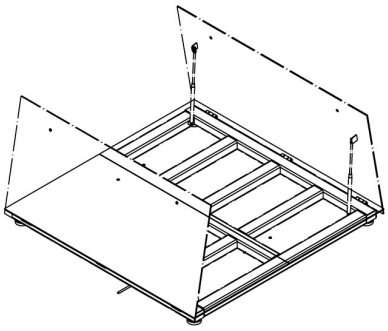

PL/4/H8/9/Z
PL/4/H9/Z
PL/4/H10/Z

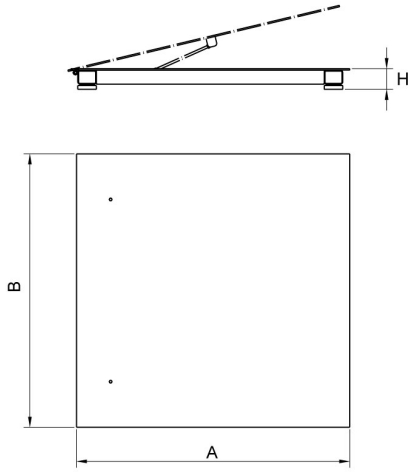

Platform	A	B	H
PL/4/H6/Z	800	800	88 ±2
PL/4/H7/Z	1000	1000	88 ±2
PL/4/H8/Z	1200	1200	88 ±2
PL/4/H8/9/Z	1200	1500	88 ±2
PL/4/H9/Z	1500	1500	88 ±2
PL/4/H10/Z	1500	2000	111 ±2

dimensions in mm

PL/4/H/Z