radwag.com

H315.15/30.H3.K Waterproof Scale

WP-124-1020

More information on the website
mirror.radwag.com/en/info,w1,5VX

The drawings, photos and graphics used are for illustrative purposes only.

Functions

- Plus/Minus Control
- Percent Weighing
- Totalizing
- Parts counting
- Internal battery
- Peak hold
- Newton unit measurement
- Animal weighing

Datasheet

Metrological parameters	
Maximum capacity [Max]	15 / 30 kg
Minimum load	100 g
Readability [d]	5 / 10 g
Verification unit [e]	5 / 10 g
Tare range	-30 kg
OIML Class	III
Physical parameters	
Display	4.3” LCD (backlit)
Cable length	2.5 m

Physical parameters	
Weighing pan dimensions	410×410 mm
Packaging dimensions W x D x H	510×510×270 mm
Net weight	15.5 kg
Gross weight	17.3 kg
Construction	
Protection class	IP 66 / 67 construction, IP 66 / 67 / 69 terminal
Communication interface	
Communication interface	RS232, USB
Optional interfaces	RS232 or RS485 or 4IN/4OUT or Ethernet or analog output 4-20 mA
Electrical parameters	
Power supply	100 – 240 V AC 50/60 Hz
Optional power supply	internal rechargeable battery
Operation time on batteries	max 7h
Environmental conditions	
Operating temperature	-10 – +40 °C
Relative humidity	10% – 85% RH no condensation

Additional fee for verification

Accessories (Additional Fee)

RS 232 cables (scale - printer)
Antivibration Tables
Displays
RS 232 cables (scale - Ethernet)
RS 232, RS 485 cables
Power Adapters
RS 232 – Ethernet Converter
USB adatper
Receipt Printer
USB cable (scale - printer)
Stands, wall mounting kits and mounting brackets
RS 232 – USB Converter
Roller Table

Software (Additional Fee)

• RAD Key [WX-010-0005]
• Scale Editor 2.1 [WX-010-0173]
• R-Lab [WX-010-0080]

Device dimensions W x D x H

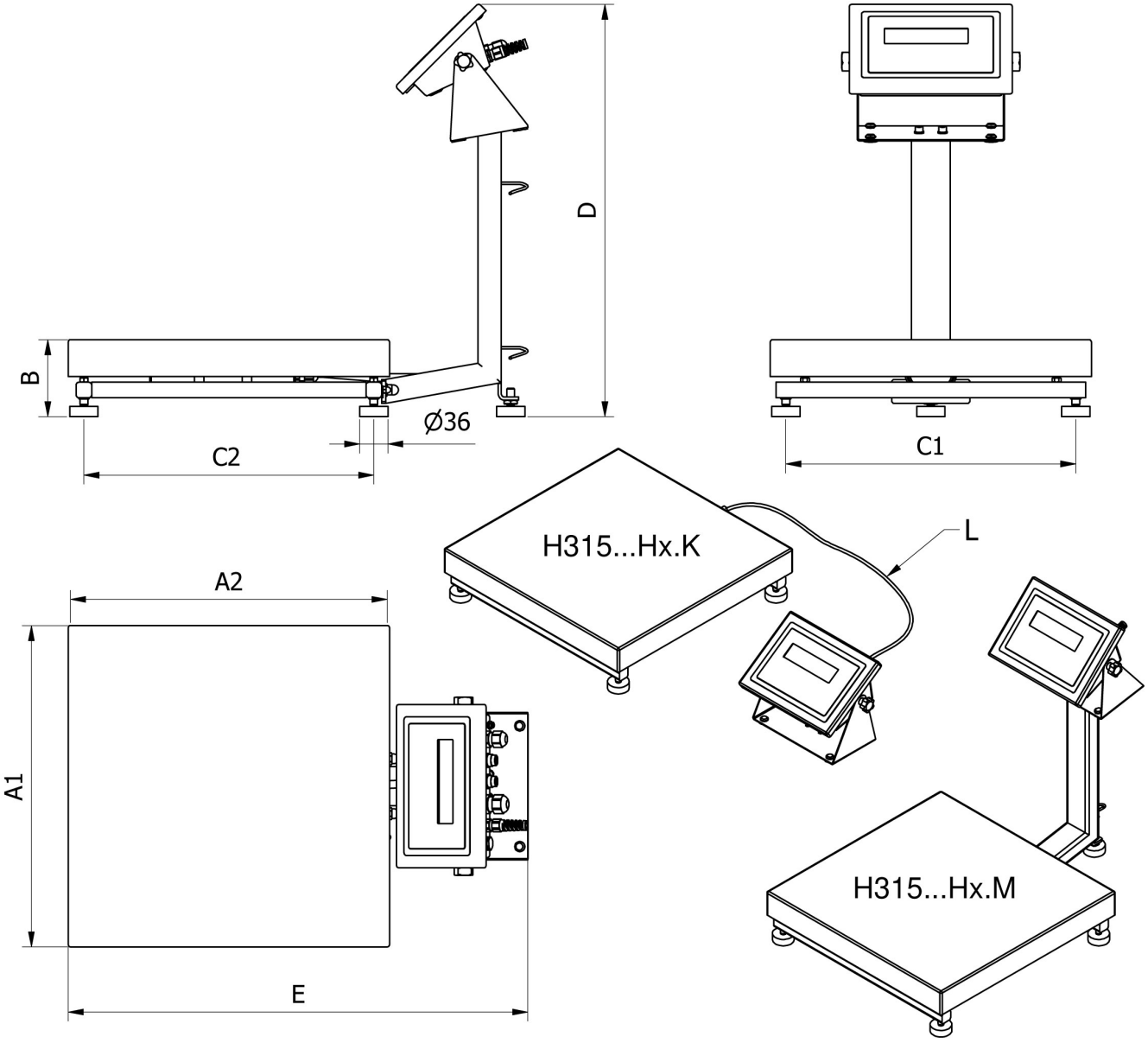

		A1	A2	B	C1	C2	D	E	L
H135...H1.M	150 x 200	152	202	87 ± 3	110	190	~443	~361	
H135...H1.K	150 x 200	152	202	87 ± 3	110	146	-	-	1,5m
H315...H2.M	250 x 300	246	306	104 ± 3	208	268	~525	~483	
H315...H2.K	250 x 300	246	306	104 ± 3	208	268	-	-	1,5m
H315...H3.M	410 x 410	410	410	98 ± 2	370	370	~525	~587	
H315...H3.K	410 x 410	410	410	98 ± 2	370	370	-	-	2,5m
H315...H4.M	500 x 500	497	497	155 ± 5	400	400	~767	~650	
H315...H4.K	500 x 500	497	497	155 ± 5	400	400	-	-	2,5m
H315...H3/5.M	400 x 600	597	397	155 ± 5	500	300	~767	~550	
H315...H3/5.K	400 x 600	597	397	155 ± 5	500	300	-	-	2,5m
H315...H5.M	600 x 600	597	597	155 ± 5	500	500	~767	~750	
H315...H5.K	600 x 600	597	597	155 ± 5	500	500	-	-	2,5m
H315...H6.M	800 x 800	799	799	135 ± 5	720	740	~773	~976	
H315...H6.K	800 x 800	799	799	135 ± 5	720	740	-	-	2,5m