radwag.com

High Resolution Platforms PL.16.HRP.H

WX-009-0153

More information on the website
mirror.radwag.com/en/info,w1,4K6



The drawings, photos and graphics used are for illustrative purposes only.

Datasheet

Metrological parameters	
Maximum capacity [Max]	16 kg
Minimum load	5 g
Preload range	4 kg
Readability [d]	0.1 g
Tare range	-16 kg
Repeatability	0.1 g
Linearity	±0.1 g
Stabilization time	2 s
Adjustment	internal (automatic)
Construction	
Protection class	IP 66 / 67
Construction	Stainless steel AISI304
Weighing pan material	Stainless steel AISI304

Communication interface	
Communication interface	RS232, RS485, Ethernet
Electrical parameters	
Power supply	100 – 240 V AC 50/60 Hz
Environmental conditions	
Operating temperature	+10 – +40 °C
Relative humidity	15% – 80%
Physical parameters	
Weighing pan dimensions	360×280 mm
Device dimensions W x D x H	360×313×170 mm
Packaging dimensions W x D x H	475×560×370 mm
Net weight	24 kg



Accessories (Additional Fee)

Ethernet cables (scale - Ethernet)
Antivibration Tables
PUE 7.1 Weighing Terminal
RS 232, RS 485 cables
IN/OUT Cables
Powerbanks
PUE HY10 Weighing Terminal
Ex-Scale-Intended Intrinsically Safe Power Supply for PUE HX5.EX Weighing Terminal
RS 232 – USB Converter

Software (Additional Fee)

• MWMH Manager [WX-010-0103]
• RADWAG Development Studio [WX-010-0104]
• RAD Key [WX-010-0005]

Device dimensions W x D x H

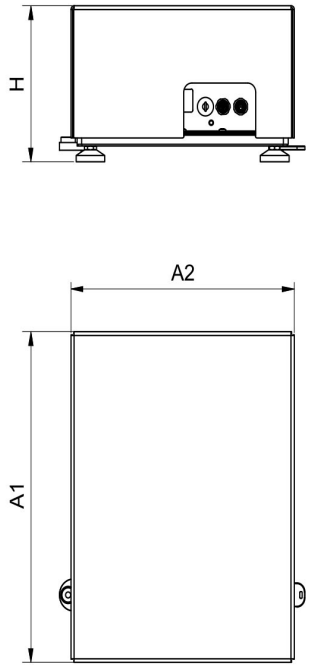

PL.16 - 32.HRP.H

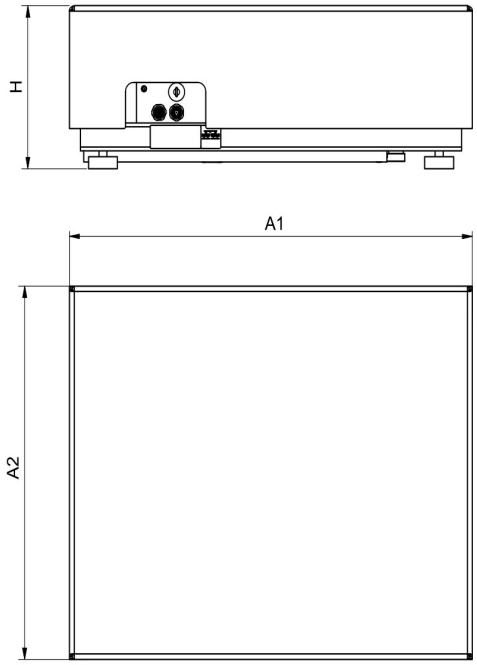

PL.62-2000.HRP.H

Scale type	A1	A2	H
PL.(16-32).HRP.H	360	280	180±5
PL.(62-150).HRP.H	500	400	180±5
PL.150.2.HRP.H	500	500	180±5
PL.(150.1-300).HRP.H	800	600	180±5
PL.(300.1-1100).HRP.H	1000	800	180±5
PL.(2000).HRP.H	1250	1000	180±5

Dimensions in mm