radwag.com

PS 10100.X7.M Precision Balance

WL-226-0001

More information on the website
mirror.radwag.com/en/info,w1,2HR

The drawings, photos and graphics used are for illustrative purposes only.

Functions

- Autotest
- Dosing
- Plus/Minus Control
- Percent Weighing
- Parts counting
- Peak hold
- Formulation
- Newton unit measurement
- Statistics
- Checkweighing
- IR sensors
- Under-pan weighing
- GLP Procedures
- Animal weighing
- Density determination
- Ambient conditions monitoring
- Replaceable unit
- Statistical Quality Control
- ALIBI Memory
- Mass for titrator
- Wi-Fi

Datasheet

Metrological parameters	
Maximum capacity [Max]	10100 g
Minimum load	-

Metrological parameters	
Readability [d]	10 mg
Verification unit [e]	-
Tare range	-10100 g
Minimum weight (USP)	10 g
Minimum weight (U=1%, k=2)	1 g
Standard repeatability [Max]	12 mg
Standard repeatability [5% Max]	5 mg
Linearity	±20 mg
Stabilization time	1.5 s
Adjustment	internal (automatic)
OIML Class	-
Sensitivity temperature drift	2×10^{-6}/°C×Rt
Physical parameters	
Leveling system	manual
Display	7" graphic colour touchscreen
Delivery components	Balance, weighing pan, weighing pan shield, power supply
Weighing pan dimensions	195×195 mm
Device dimensions W x D x H	333x206x107 mm
Packaging dimensions W x D x H	476×381×346 mm
Net weight	5.4 kg
Gross weight	7.6 kg
Construction	
Protection class	IP 43
Components and software	
Database capacity	Products, Users, Packaging, Customers, Formulations, Formulations reports, Ambient Conditions, Weighings, Alibi memory
Features of use	
Touch-free operation	2 IR Sensors
Communication interface	
Communication interface	2×RS232[1], USB-A, USB-B, Ethernet, Wi-Fi
Electrical parameters	
Power supply	Adapter: 100 – 240V AC 50/60Hz 0.6A Max; 12V DC 1.2A Balance: 12 – 15V DC 0.9A max; 4 – 8W*
Power consumption	4 W
Environmental conditions	
Operating temperature	+10 – +40 °C
Ambient conditions monitoring (option)	THBR 2.0 System, THBR BOX, THB P, THB W, THB S
Storage temperature	-20 – +50 °C
Relative humidity	40% – 80%

Repeatability is expressed as a standard deviation from 10 weighing cycles.
Stabilization time depends on the ambient conditions and the dynamics of weighing pan loading; specified for FAST profile.

* Power consumption depends on the terminal configuration as well as the number and type of external devices connected.
[1] Barcode scanners, available as weighing instrument accessory, communicate with the instrument via RS232 interface exclusively.

* Wi-Fi® is a registered trademark of Wi-Fi® Alliance.

Accessories (Additional Fee)

Balance Storage Case
Antivibration Tables
Power Adapters
Cigarette lighter receptacle power supply cables
USB cable (scale - printer)
Barcode scanners
RS 232, RS 485 cables
THBR 2.0 System - Ambient Conditions Monitoring
Displays
Density determination KIT
Protective cover for balances
Receipt Printer
Additional modules
Under-pan weighing
RS 232 cables (scale - printer)
RS 232 – RS 485 Converter

Software (Additional Fee)

• RAD Key [WX-010-0005]
• R-Lab [WX-010-0080]
• RADWAG Development Studio [WX-010-0104]
• Alibi Reader [WX-010-0114]
• Scale Editor 2.1 [WX-010-0173]
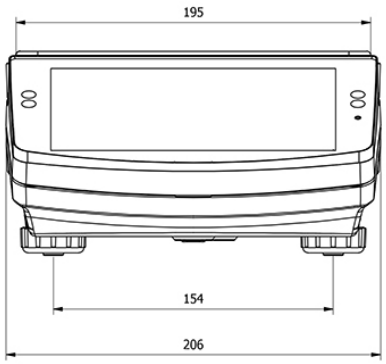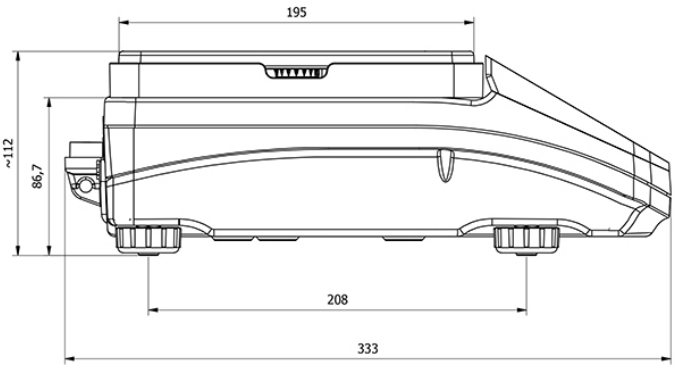
Device dimensions W x D x H