radwag.com

C315.6.F1.M Load Cell Platform Scale

WP-123-0007

More information on the website
mirror.radwag.com/en/info,w1,255

The drawings, photos and graphics used are for illustrative purposes only.

Functions

- Plus/Minus Control
- Percent Weighing
- Totalizing
- Parts counting
- Internal battery
- Peak hold
- Newton unit measurement
- GLP Procedures
- Animal weighing
- ALIBI Memory

Datasheet

Metrological parameters	
Maximum capacity [Max]	6 kg
Minimum load	40 g
Readability [d]	2 g
Verification unit [e]	2 g
Tare range	-6 kg
Max readability for non-verified scale	0.2 g
OIML Class	III

Physical parameters	
Display	4.3” LCD (backlit)
Weighing pan dimensions	300×300 mm
Packaging dimensions W x D x H	570×390×170 mm
Net weight	5 kg
Gross weight	7 kg
Construction	
Protection class	IP 65 construction, IP 43 terminal
Construction	mild steel St3S
Weighing pan material	Stainless steel AISI304
Communication interface	
Communication interface	RS232
Optional interfaces	RS232
Electrical parameters	
Power supply	100 – 240 V AC 50/60 Hz and battery
Power consumption max.	5 W
Operation time on batteries	max 8h
Environmental conditions	
Operating temperature	-10 – +40 °C
Storage temperature	-10 – +50 °C
Relative humidity	10% – 85% RH no condensation
Indicator	C315

Additional fee for verification

Accessories (Additional Fee)

Antivibration Tables
Power Adapters
RS 232 cables (scale - printer)
Cigarette lighter receptacle power supply cables
Displays
RS 232, RS 485 cables
RS 232 – Ethernet Converter
AP2-1 Current Loop Unit
RS 232 – USB Converter
RS 232 – RS 485 Converter
Receipt Printer
Stands, wall mounting kits and mounting brackets

Software (Additional Fee)

• RAD Key [WX-010-0005]
• Scale Editor 2.1 [WX-010-0173]
• R-Lab [WX-010-0080]

Device dimensions W x D x H

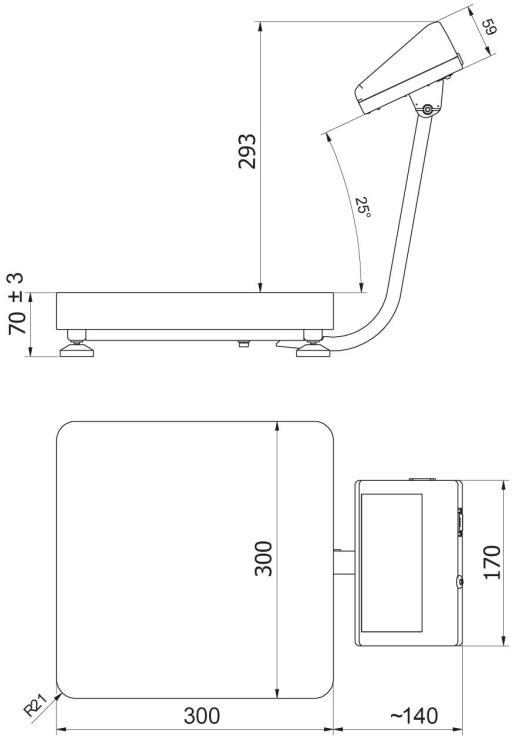

C315.F1.M

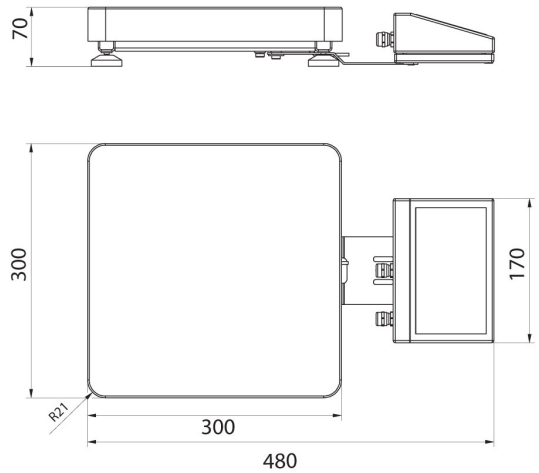

C315.F1.R

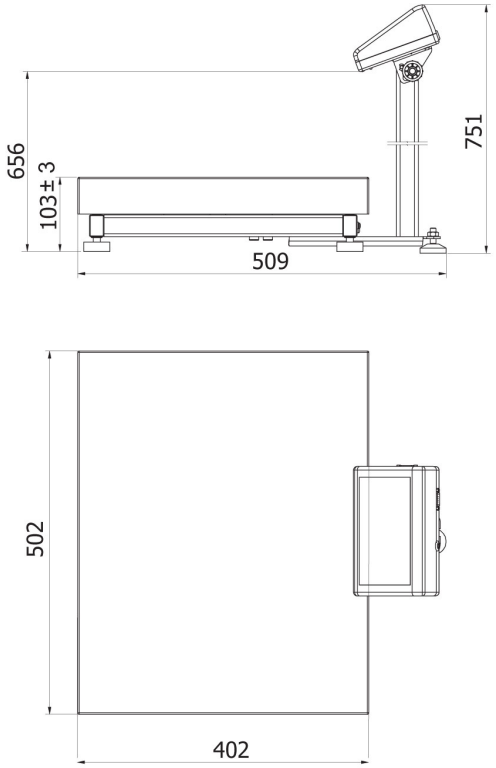

C315.C2.M

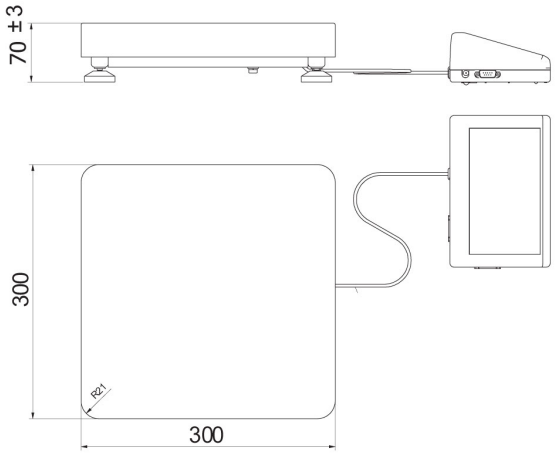

C315.C2.K