radwag.com

HY10.15.H1.K Multifunctional Scale

WP-116-0062

More information on the website
mirror.radwag.com/en/info,w1,1VA



The drawings, photos and graphics used are for illustrative purposes only.

Functions

- Dosing
- Labelling
- Plus/Minus Control
- Percent Weighing
- Totalizing
- Parts counting
- Peak hold
- Formulation
- Newton unit measurement
- Statistics
- Checkweighing
- GLP Procedures
- Animal weighing
- Differential weighing
- Replaceable unit
- Statistical Quality Control
- ALIBI Memory
- Transactions

Datasheet

Metrological parameters	
Maximum capacity [Max]	15 kg
Minimum load	100 g
Readability [d]	5 g
Verification unit [e]	5 g

Metrological parameters	
Tare range	-15 kg
Max readability for non-verified scale	0.5 g
Adjustment	external
OIML Class	III
Physical parameters	
Display	10.1" graphic colour touchscreen
Cable length	1.5 m
Weighing pan dimensions	150×200 mm
Packaging dimensions W x D x H	350×420×470 mm
Net weight	7 kg
Gross weight	8.5 kg
Construction	
Protection class	IP 66 / 67 construction, IP 66 / 67 / 69 terminal
Communication interface	
Communication interface	2×RS232, 2×USB-A, Ethernet, 4 IN / 4 OUT (digital)
Optional interfaces	module Wi-Fi 802.11 b/g/n, module Profibus (DP SLAVE), module RS485, module PROFINET (RJ45), analog output module (4-20mA, 0-20mA, 0-10V) , 12IN / 12OUT (IN – 5-24 VDC, OUT – max 30 VDC, 0.5 ADC)
Electrical parameters	
Power supply	100 – 240 V AC 50/60 Hz
Environmental conditions	
Operating temperature	-10 – +40 °C
Relative humidity	10% – 85% RH no condensation

* Wi-Fi® is a registered trademark of Wi-Fi® Alliance.





Additional fee for verification

Accessories (Additional Fee)

AP2-4 Current Loop Unit
RS 232 cables (scale - printer)
Transponder card readers
RS 232 cables (scale - ZEBRA printer)
Antivibration Tables
Ethernet cables (scale - Ethernet)
Displays
RS 232, RS 485 cables
IN/OUT Cables
Barcode scanners
Label Printers
Stands, wall mounting kits and mounting brackets
Keypad, external switches
Receipt Printer
F1 Mass Standard -
knob weights without adjustment chamber, set
USB cable (scale - printer)
Additional Weighing platforms Module
Additional modules
RS 232 – USB Converter

Software (Additional Fee)

• E2R Weighing [WX-010-0099]
• Audit Trail Reader [WX-010-0186]
• RAD Key [WX-010-0005]
• Label Editor R02 [WX-010-0094]

- RADWAG Remote Desktop [WX-010-0107]
- Scale Editor 2.1 [WX-010-0173]
- R-Lab [WX-010-0080]
- RADWAG Development Studio [WX-010-0104]

Device dimensions W x D x H

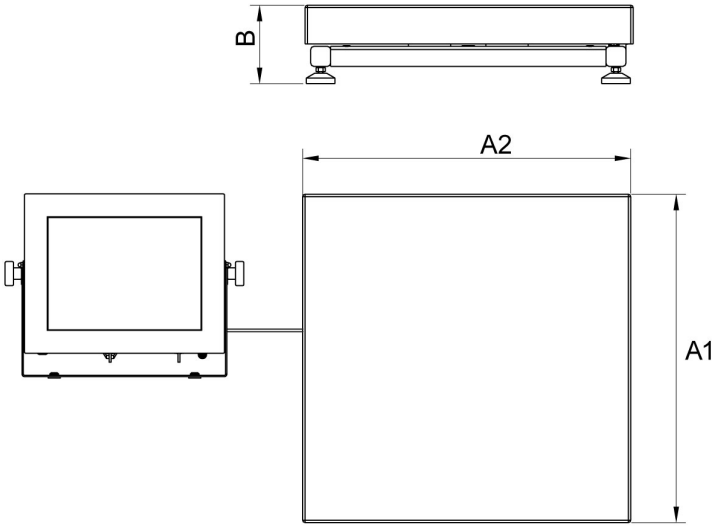

H Platform

Scale type	A1	A2	B
HY10 H1.K	200	150	85 ±3
HY10 H2.K	250	300	103 ±3
HY10 H3.K	410	410	98 ±2
HY10 H4.K	500	500	155 ±5
HY10 H5.K	600	600	155 ±5
HY10 H6.K	800	800	135 ±5

dimensions in mm

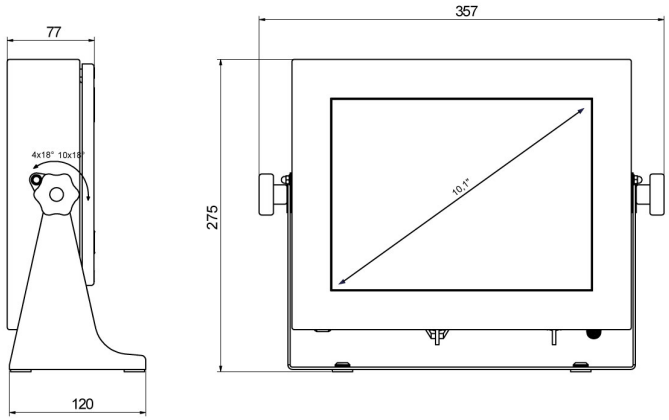

PUE HY10