radwag.com

Supporti da laboratoro UL-04-1 (AS)

WX-001-0033

More information on the website
mirror.radwag.com/it/info,w1,1OF

The drawings, photos and graphics used are for illustrative purposes only.

Specifiche

Parametri fisici	
Dimensioni del pacco L x P x A	110×102×56 mm
Peso net	103 g
Peso lordo	145 g

Compatibile con (Additional Fee)

AS X7 Bilancia analitica
Bilancia analitica AS 5Y
Bilancia analitica AS R2 PLUS
Bilancia analitica AS R1 PLUS
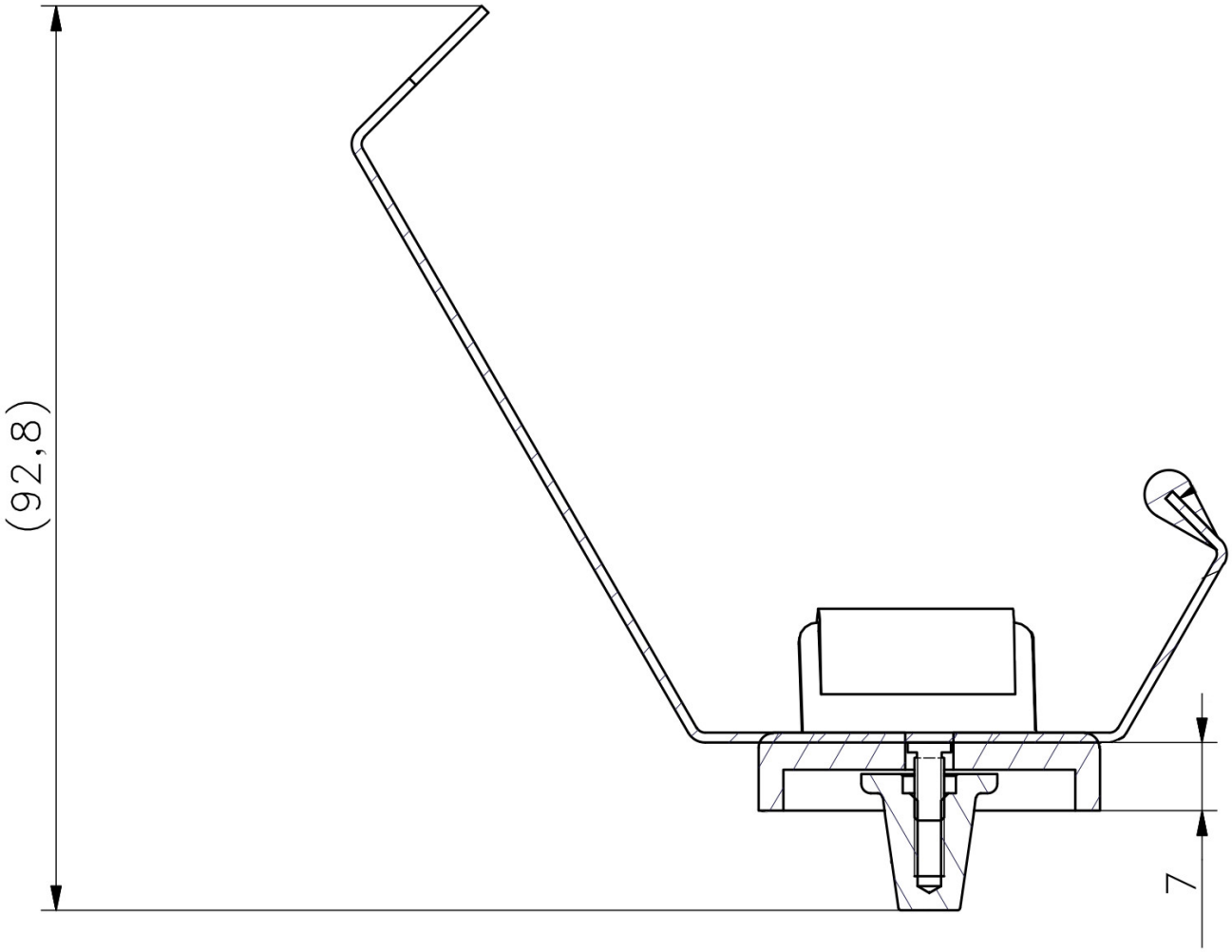
Device dimensions L x P x A